CALIFORNIA
AMERICAN WATER

TRANSMISSION MAINS FOR MONTEREY PENINSULA WATER SUPPLY PROJECT (MPWSP) TERMINAL RESERVOIR

DRAWING INDEX No. 1000-5005-G00

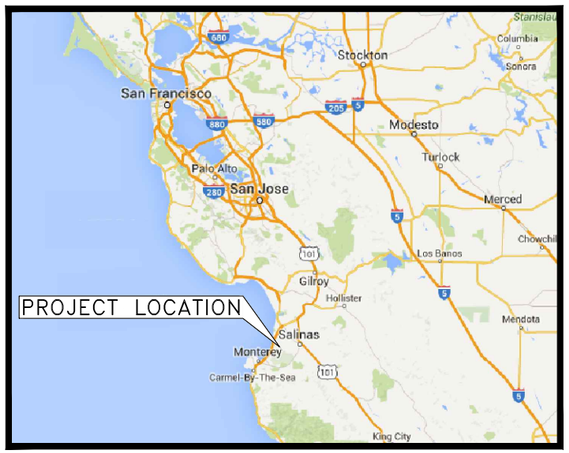

VICINITY MAP
SCALE: NTS

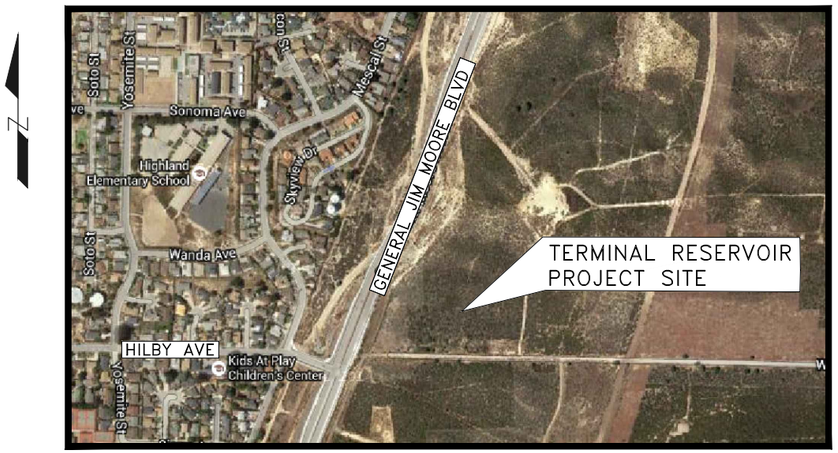

SITE LOCATION MAP
SCALE: NTS

AECOM

SEPTEMBER 2015

F:\Work\CAL-Am-MPWSP\Terminal-Reservoir\1_Sheets\5005G00.dwg Christina_Somero Sep 16, 2015 - 9:44pm
XREFS:

DRAWING INDEX No. 1000-5005-G00

GENERAL

SHEET	TITLE
5005G00	COVER SHEET
5005G01	LIST OF DRAWINGS AND PROJECT CONTACT
5005G02	GENERAL ABBREVIATIONS
5005G03	GENERAL LEGEND
5005G04	GENERAL NOTES 1 OF 2
5005G05	GENERAL NOTES 2 OF 2

CIVIL

SHEET	TITLE
5005C01	KEY PLAN
5005C02	HORIZONTAL CONTROL PLAN
5005C03	TANK SITE PLAN
5005C04	FUTURE PARKING SITE PLAN
5005C05	OVERFLOW BASIN SITE PLAN
5005C06	PLAN AND PROFILE STA 00+00 TO 1+00
5005C07	PLAN AND PROFILE STA 1+00 TO 5+50
5005C08	PLAN AND PROFILE STA 5+50 TO 10+00
5005C09	PLAN AND PROFILE STA 10+00 TO 13+35
5005C10	TANK ACCESS ROAD PLAN AND PROFILE-1
5005C11	TAMK ACCESS ROAD PLAN AND PROFILE-2
5005C12	TANK ACCESS ROAD PLAN AND PROFILE-3
5005C13	SOCCER FIELD ACCESS ROAD PLAN AND PROFILE
5005C14	CROSS SECTION
5005C15	ROAD CROSS SECTIONS
5005C16	EROSION CONTROL

CIVIL DETAILS

SHEET	TITLE
5005CD01	DETAILS – 1 OF 3
5005CD02	DETAILS – 2 OF 3
5005CD04	DETAILS – 3 OF 3
5005CD04	TYPICAL PIPE DETAILS
5005CD05	CHAIN LINK FENCE DETAILS
5005CD06	EXCLUSION FENCE DETAILS

MECHNICAL

SHEET	TITLE
5005M01	TERMINAL RESERVOIR SCHEMATIC
5005M02	INLET VALVE VAULT
5005M03	OUTLET AND DRAIN VALVE VAULTS
5005M04	VALVE DETAILS
5005M05	BLOWOFF DETAILS
5005M06	MISCELLANEOUS DETAIL-1
5005M07	COMBINATION AIR RELEASE VALVE
5005M09	PIPELINE CONNECTION DETAILS
5005M09	MISCELLANEOUS DETAILS
5005M10	MANHOLE COVER – SECTIONS & DETAILS
5005M11	TANK PLANS AND SECTIONS
5005M12	TANK WALL AND WALL FOOTING DETAILS
5005M13	TANK PIPE DETAILS
5055M14	TANK INTERIOR LADDER, ROOF HATCH & DOWNSPOUT DETAILS
5005M15	TANK EXTERIOR LADDER DETAILS
5005M16	OUTLET PIPE PRS DETAILS
5005M17	FLOWMETER DETAILS

ELECTRICAL

SHEET NO.	TITLE
5005E01	SINGLE LINE DIAGRAM
5005E02	LIGHTING DETAILS
5005E03	FLOW METER ELECTRICAL DETAILS
5005E04	TANK ELECTRIC PLAN

UTILITY CONTACTS FOR PROJECT AREA

AGENCY	TYPE	CONTACT	TITLE	PHONE	EMAIL
AT&T	COMMUNICATIONS	JANICE COMASKEY	ADMIN MANAGER CONSTRUCTION & ENGINNERING	(408) 635-8781	jc4363@att.com
CALIFORNIA AMERICAN WATER	WATER	DOUGLAS FRASER	SENIOR PROJECT MANAGER	(831) 236-4494	douglas.fraser@amwater.com
COMCAST	COMMUNICATIONS	MARK ROSE	CABLE CONTRACTOR	(831) 633-2392	mark.rose@cablecomllc.net
CITY OF MARINA	SEWER AND STORM DRAIN	NOURDIN KHAYATA	CITY ENGINEER	(831) 884-1212	nkhayata@ci.marina.ca.us
CITY OF MONTEREY	SEWER AND STORM DRAIN	JOHN KUEHL	BUILDING OFFICIAL	(831) 646-5643	kuehl@monterey.org
CITY OF PACIFIC GROVE	SEWER AND STORM DRAIN	VINCE GENTRY	SEWER FIELD SUPERVISOR	(831) 648-5722	vgentry@ci.pg.ca.us
CITY OF SEASIDE	SEWER, STORM DRAIN AND WATER	RICK RIEDL	SENIOR CIVIL ENGINEER	(831) 899-6884	rriedl@ci.seaside.ca.us
COUNTY OF MONTEREY	SEWER AND STORM DRAIN	CHAD ALINIO	CIVIL ENGINEER	(831) 755-4937	aliniocs@co.monterey.ca.us
MARINA COAST WATER DISTRICT	WATER	BRIAN TRUE	CAPITAL PROJECTS MANAGER	(831) 384-6131	btrue@mcwd.org
PG&E	GAS AND ELECTRIC	WEIDONG TAN	ENGINEERING & PLANNING DIV.	(831) 784-3510	wxtk@pge.com
MONTEREY PENINSULA WATER MANAGEMENT OFFICE	WATER	JOE OLIVER	WATER RESOURCES MANAGER	(831) 658-5600	joe@mpwmd.dst.ca.us
MONTEREY REGIONAL WATER POLLUTION CONTROL AGENCY	SEWER AND RECYCLED WATER	JENNIFER GONZALES	ENGINEERING MANAGER	(831) 883-6172	jennifer@mrwpca.com

REGISTERED PROFESSIONAL ENGINEER
CRAIG JEFFERY SMITH
No. 70883
Exp. 6-30-17
CIVIL
STATE OF CALIFORNIA

REVISIONS

TRANSMISSION MAINS FOR MPWSP
GENERAL
TERMINAL RESERVOIR
LIST OF DRAWINGS AND PROJECT CONTACT

CALIFORNIA
AMERICAN WATER

URS CORPORATION
1333 BROADWAY, SUITE 800
OAKLAND, CALIFORNIA 94612

AECOM

CALIFORNIA AMERICAN WATER

DRAWN BY R. YIP
PROJECT ENG'R T. PENG
APPROVED C. SMITH

DATE SEPTEMBER 2015 **USE DIMENSIONS ONLY**
PROJECT 60424498 **SCALE** AS SHOWN

USE APPROVED DRAWINGS ONLY FOR CONSTRUCTION PURPOSES

5005G01

10005005G02

F:\Work\CAL-Am-MPWSP\Terminal-Reservoir\1 Sheets\5005G01.dwg Christina Somera Sep 16, 2015 - 9:44pm

GENERAL ABBREVIATIONS

A	AMPERE
AB	AGGREGATE BASE/ANCHOR BOLT
AC	ASPHALT CONCRETE/AESBESTOS CEMENT
ADAS	AUTOMATIC DATA ACQUISITION SYSTEM
ADD	ADDITION(AL)
AFF	ABOVE FINISHED FLOOR
ALT	ALTERNATE
AL	ALUMINUM
APPROX	APPROXIMATE
ARCH	ARCHITECTURAL
AREMA	AMERICAN RAILWAY ENGINEERING & MAINTENANCE-OF-WAY ASSOCIATION
ARV	AIR RELEASE VALVE
ASR	AQUIFER STORAGE & RECOVERY
ASSY	ASSEMBLY
ATS	ANODE BED TEST STATION
AV	AIR VALVE
AVG	AVERAGE
AVMH	AIR VALVE MANHOLE
AUX	AUXILIARY
BB	BEGINNING OF BRIDGE
BC	BEGIN CURVE
BEG	BEGIN(NING)
BF	BLIND FLANGE
BFV	BUTTERFLY VALVE
BG	BILLION GALLONS
BLDG	BUILDING
BLK	BLACK
BLVD	BOULEVARD
BO	BLOW OFF/BOTTOM OF
BOMH	BLOW-OFF MANHOLE
BOT	BOTTOM
BOF	BOTTOM OF FOOTING
BRG	BEARING
C	CONDUIT
CAP	CAPACITY
CAW	CALIFORNIA AMERICAN WATER
CB	CATCH BASIN/CIRCUIT BREAKER
C/C, CC	CENTER TO CENTER
℄	CENTER LINE
CDPH	CALIFORNIA DEPARTMENT OF PUBLIC HEALTH
CF	CUBIC FEET
CFS	CUBIC FEET PER SECOND
CI	CAST IRON
CIDH	CAST IN PLACE DRILLED HOLE
CIR	CIRCLE
CJ	CONSTRUCTION JOINT
CJP	COMPLETE JOINT PENETRATION
CKT. NO.	CIRCUIT NUMBER
CK P	CHECKER PLATE L
CLR	CLEARANCE
CLSM	CONTROLLED LOW STRENGTH MATERIAL
CMP	CORRUGATED METAL PIPE
CO	CLEAN OUT
COF	CITY OF FREMONT
COMM	COMMUNICATION
CONC	CONCRETE
CONN	CONNECTION
COND	CONDUIT
CONT	CONTINUE/CONTINUOUS/CONTINUATION
CONST	CONSTRUCTION
CPLG	COUPLING
CSIP	CASTROVILLE SEAWATER INTRUSION PROJECT
CSUMB	CALIFORNIA STATE UNIVERSITY MONTEREY BAY
CTE	COAL TAR ENAMEL
CTEL	CONNECT TO EXISTING LINE
CTR	CENTER D DEPTH/DIAMETER
DET	DETAIL
DFT	DRY FILL THICKNESS
DI	DRAINAGE INLET/DUCTILE IRON
DIA, ø	DIAMETER
DIP	DUCTILE IRON PIPE
DIAG	DIAGRAM
DIM	DIMENSION
DIP	DUCTILE IRON PIPE
DN	DOWN
DR	DRAINAGE, DOOR
DWG	DRAWING

E	EAST
EA	EACH
EB	END OF BRIDGE/EAST BOUND
EC	END CURVE
EE	EACH END
EF	EACH FACE
EG	EXISTING GROUND
EL	ELEVATION
ELEC	ELECTRICAL
ELL	ELBOW
EP	EDGE OF PAVEMENT
EPS	EXPANDED POLYSTYRENE
EOD	EDGE OF DECK
EQ	EQUAL
EQUIP	EQUIPMENT
ES	EACH SIDE
ETW	EDGE OF TRAVELED WAY
EW	EACH WAY
EXH	EXHAUST
(E)	EXISTING
EXP	EXPANSION
FB	FILLER BAR
FDN	FOUNDATION
FE	FLANGE END
FF	FAR FACE
FG	FINISHED GRADE
FIG	FIGURE
FIN	FINISHED
FL	FLOOR, FLOW LINE
FLEX	FLEXIBLE
FLG	FLAG(GED)
FORA	FORT ORD REUSE AUTHORITY
FPS	FEET PER SECOND
FS	FACTOR OF SAFETY
FT	FOOT
(F)	FUTURE
F/I	FURNISH AND INSTALL
GA	GAGE
GALV	GALVANIZED
GB	GRADE BEAM
GEN	GENERAL
GPM	GALLONS PER MINUTE
GR	GRADE
GRD	GROUND
GRS	GALVANIZED RIGID STEEL
GRTG	GRATING
GSKT	GASKET
GV	GATE VALVE
HDPE	HIGH DENSITY POLYETHYLENE
HDD	HORIZONTAL DIRECTIONAL DRILLING
HGT	HEIGHT
H, HOR	HORIZONTAL
HP	HORSEPOWER, HIGH POINT, HIGH PRESSURE
HPI	HORIZONTAL POINT OF INTERSECTION
HR	HANDRAIL, HOUR
HSR	HIGH STRENGTH ROD
HVAC	HEAT, VENTILATING & AIR CONDITIONING
HV	HOSE VALVE
HWY	HIGHWAY
HYD	HYDRAULIC
ID	INSIDE DIAMETER
IFJ	INSULATED FLANGE JOINT
IN	INCH
INFO	INFORMATION
INST	INSTRUMENTATION
INV	INVERT
IR	IRRIGATION
JT	JOINT
JCT	JUNCTION
JP	JOINT POLE

L	LENGTH
LB	POUND
LEV	LEVEL
LT	LEFT
LONG	LONGITUDINAL
LN	LANE
LP	LOW POINT, LOW PRESSURE
LTG	LIGHTING
M, MTR	MOTOR
MAN	MANUAL
MATL	MATERIAL
MAX	MAXIMUM
MB	MACHINE BOLT
MCC	MOTOR CONTROL CENTER
MCU	MEASUREMENT CONTROL UNIT
MCWD	MARINA COAST WATER DISTRICT
MECH	MECHANICAL
MFR	MANUFACTURE(R)
MH	MANHOLE
MIN	MINIMUM, MINUTE
MISC	MISCELLANEOUS
MPWSP	MONTEREY PENINSULA WATER SUPPLY PROJECT
MRWMD	MONTEREY REGIONAL WASTE MANAGEMENT DISTRICT
MRWPCA	MONTEREY REGIONAL WATER POLLUTION CONTROL AGENCY
N	NORTH
NB	NORTH BOUND
NC	NORMALLY CLOSED
NEC, N.E.C.	NATIONAL ELECTRICAL CODE
NF	NEAR FACE
NIC	NOT IN CONTRACT
NJD	NOMINAL JOINT DIAMETER
NO	NORMALLY OPEN, NUMBER
NPT	NATIONAL PIPE THREAD
NMWS	NORMAL MAXIMUM WATER SURFACE
NOM	NOMINAL
NTS	NOT TO SCALE
(N)	NEW
O&M	OPERATION & MAINTENANCE
OC	ON CENTER
OD	OUTSIDE DIAMETER
OF	OUTSIDE FACE
OG	ORIGINAL GROUND SURFACE
OH	OVERHEAD/OPPOSITE HAND
OPNG	OPENING
P	POLE
PB	PULL BOX
PC	PIECE, POINT OF CURVE
PCC	PORTLAND CEMENT CONCRETE
PCCP	PRE-STRESSED CONCRETE CYLINDER PIPE
PE	PLAIN END
PG	PRESSURE GAGE/PRONG
PH	PHASE
PL, ℄	PLATE OR PROPERTY LINE
PI	POINT OF INTERSECTION
PKWY	PARKWAY
PMF	PROBABLE MAXIMUM FLOOD
POC	POINT OF CONNECTION
PRV	PRESSURE REDUCING VALVE
PRS	PRESSURE REDUCING STATION
PSF	POUNDS PER SQUARE FOOT
PSI	POUNDS PER SQUARE INCH
PSL	PIPE SLEEVE
PT	POINT, POINT OF TANGENCY
PTFE	POLYTETRAFLUOROETHYLENE (TEFLON)
PVC	POLYVINYL CHLORIDE
PVI	POINT OF VERTICAL INTERSECTION
PVMT	PAVEMENT

R	RADIUS, RISER
RCP	REINFORCED CONCRETE PIPE
RC	REINFORCED CONCRETE
RD	ROAD OR ROOF DRAIN
RED	REDUCER
REF	REFERENCE
REINF	REINFORCEMENT
REM	REMOVABLE
REQ'D, REQ	REQUIRED
RPP	REDUCED PRESSURE PRINCIPLE
RM	ROOM
RPM	REVOLUTIONS PER MINUTE
RT	RIGHT
RUB	RUBBER
ROW	RIGHT OF WAY
RWQCB	REGIONAL WATER QUALITY CONTROL BOARD
R/W	RIGHT OF WAY
S	SLOPE
SB	SOUTH BOUND
SCH	SCHEDULE
SD	STORM DRAIN
SDMH	STORM DRAIN MANHOLE
SECT	SECTION
SFPUC	SAN FRANCISCO PUBLIC UTILITIES COMMISSION
SFWD	SAN FRANCISCO WATER DEPARTMENT
SHT	SHEET
SIM	SIMILAR
SMWS	------
SPEC	SPECIFICATION(S)
SQ	SQUARE
SS	SANITARY SEWER/STAINLESS STEEL
SSMH	SANITARY SEWER MANHOLE
STA	STATION
STD	STANDARD
STL	STEEL, STREET LIGHTING
STRUCT	STRUCTURE
SURF	SURFACE
SW	SEA WATER
SVU	SALINAS VALLEY RETURN PIPELINES
SVR	SALINAS VALLEY RETURN
SYM ABT	SYMMETRIC ABOUT
T	TREAD
t	THICKNESS
T & B	TOP & BOTTOM
TEL	TELEPHONE/TELECOM
TEMP	TEMPORARY
TO	TOP OF
TOC	TOP OF CURB, TOP OF CONCRETE
TOT	TOTAL
TOW	TOP OF WALL
TYP	TYPICAL
THK	THICK
Tts	TEMBLOR SANDSTONE FORMATION
THRU	THROUGH
TS	TEST STATION
TYP	TYPICAL
UG, U/G	UNDERGROUND
UGE	UNDERGROUND ELECTRICAL
UON	UNLESS OTHERWISE NOTED
UPPR	UNION PACIFIC RAILROAD
USD	UNION SANITARY DISTRICT
U/N, U.O.N.	UNLESS OTHERWISE NOTED

V, VERT	VERTICAL
VAC	VACUUM
VC	VERTICAL CURVE
VCP	VITREOUS CLAY PIPE
VL	VALVE
VOL	VOLUME
VPI	VERTICAL POINT OF INTERSECTION
V.I.F.	VERIFY IN FIELD
WB	WEST BOUND
WEF	WILDLIFE EXCLUSION FENCE
WI	WROUGHT IRON
W/	WITH
W/O	WITHOUT
W	WIDTH, WEST, WATER, WIRE
WD	WOOD
WHT	WHITE
WS	WATER SURFACE
WSE	WATER SURFACE EXIST
WSL	WATER SURFACE LEVEL
WSP	WELDED STEEL PIPE
WT	WATER TIGHT, WEIGHT
WV	WATER VALVE
YD	YARD
1d	EMBEDMENT LENGTH
#	NUMBER

REGISTERED PROFESSIONAL ENGINEER
CRAIG JEFFERY SMITH
No. 70883
Exp. 6-30-17
CIVIL
STATE OF CALIFORNIA

REVISIONS

TRANSMISSION MAINS FOR MPWSP
GENERAL
TERMINAL RESERVOIR
GENERAL ABBREVIATIONS

CALIFORNIA
AMERICAN WATER

AECOM
1333 BROADWAY, SUITE 800
OAKLAND, CALIFORNIA 94612

AECOM
CALIFORNIA AMERICAN WATER

DRAWN BY C. SOMERA
PROJECT ENG'R T. PENG
APPROVED C. SMITH

DATE SEPTEMBER 2015 USE DIMENSIONS ONLY
PROJECT 60424498 SCALE AS SHOWN

USE APPROVED DRAWINGS ONLY FOR CONSTRUCTION PURPOSES

5005G02

10005005G04

F:\Work\CAL-Am-MPWSP\Terminal-Reservoir\1 Sheets\5005G04.dwg Christina Somera Sep 16, 2015 - 9:45pm

GENERAL LEGEND

- WATER METER
- EXISTING CONTROL POINT
- NEW CONTROL POINT/ ELEVATION POINT
- TEST PITS
- EXPLORATORY BORING
- PIEZOMETERS
- PIPE W/ CAP
- x — SPOT ELEVATION
- TREE, SHRUB
- WATER LEVEL ELEVATION
- 1.5:1 — SLOPE GRADIENT (HOR. : VERT.)
- FLOW LINE
- CUT SLOPE
- FILL SLOPE
- 230 — EXISTING GRADE CONTOUR
- 245 — FINISHED GRADE CONTOUR
- GP — GATE POST
- GUY ANCHOR
- POWER POLE, STEEL
- MH — WATER PIPE MANHOLE
- BO — BLOW OFF VALVE
- CHECK VALVE
- REDUCER
- UTILITY POLE
- IN-3 — EXISTING INCLINOMETER
- TP — TELEPHONE POLE
- BFV COVER AND CONCRETE PAD
- GAS VALVE
- T — TELELPHONE MH OR BOX
- C — COMMUNICATION BOX
- TRANSMISSION TOWER
- RI — SANITARY SEWER RODDING INLET
- WV — GATE WATER VALVE
- WV — BUTTERFLY WATER VALVE
- BO — BLOWOFF TO FIRE HYDRANT
- AIR — COMBINATION AIR RELEASE VALVE
- ANODE

- CO — CLEAN-OUT
- BUBBLE UP
- STORM DRAIN MANHOLE
- SEWER MANHOLE
- EXISTING WATER VALVE
- FIRE HYDRANT
- W — WATER STRUCTURE
- WELL
- WATER VAULT
- CATCH BASIN
- TRANSFORMER W/PAD
- TRANSFORMER SUBSURFACE
- E — ELECTRICAL BOX
- STREETLIGHT
- STREETLIGHT AND UTILITY POLE
- E — MANHOLE ELECTRICAL
- ELECTRIC TEST STATION
- ROCK SURFACE
- NATURAL GROUND OR GRADE
- BACKFILL
- AC BERM
- CONCRETE, CONCRETE SIDEWALK
- STAGING AREA
- ASPHALT
- AGGREGATE/BALLAST, GRAVEL ACCESS ROAD
- HYDROSEED
- CLEAR & GRUB
- EXISTING TO BE DEMOLISHED
- (N) ASPHALTIC CONCRETE
- AGGREGATE BASE
- (E) ASPHALTIC CONCRETE
- FOUNDATION STONE
- INITIAL BACKFILL
- UNDISTURBED SOIL
- BUILDING

- FENCE
- CALTRANS RIGHT OF WAY
- PARCEL BOUNDARY
- CITY LIMITS
- LIMITS OF WORK
- G — GAS LINE
- W — WATER LINE
- W — NEW WATER LINE
- RW — RECYCLED WATER LINE
- SS — SANITARY SEWER LINE
- SD — STORMDRAIN LINE
- E — ELECTRICAL LINE
- (E)OH — ELECTRICAL OVERHEAD LINE
- ATT — TEL/AT&T LINE
- IR — IRRIGATION LINE
- DRAIN SWALE
- CC — COMCAST UNDERGROUND
- CC — COMCAST OVERHEAD
- SSFM — SANITARY SEWER FORCED MAIN
- T — TELEPHONE LINE
- BL — BRINE LINE WASTE WATER
- FO — FIBER OPTIC
- FM — FORCED MAIN
- SSFM — SANTARY SEWER FORCED MAIN
- SO — SANTARY OUTFALL
- FORA RIGHT-OF-ENTRY
- BUFFER ZONE
- CENTERLINE
- EASEMENT LINE
- 893 — EXISTING MAJOR CONTOUR
- 893 — EXISTING MINOR CONTOUR
- 893 — MAJOR CONTOUR
- MINOR CONTOUR
- MATCHLINE
- GRADE BREAK LINE
- CURB AND GUTTER

DEMOLITION LEGEND

- DEMOLITION
- ABANDON
- 1 — ITEMS TO BE PROTECTED
- 1 — ITEMS TO BE DEMOLISHED / REMOVED
- 1 — ITEMS TO BE SALVAGED / REUSED
- 1 — POINT ID
- TREE STUMP\ROOT TO BE REMOVED AS NEEDED

LEGEND:

TYPICAL SECTION/DETAIL NUMBERING SYSTEM

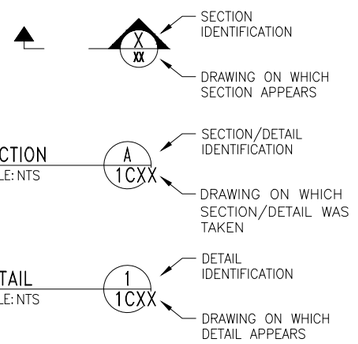

REGISTERED PROFESSIONAL ENGINEER
CRAIG JEFFERY SMITH
No. 70883
Exp. 6-30-17
CIVIL
STATE OF CALIFORNIA

REVISIONS

TRANSMISSION MAINS FOR MPWSP
GENERAL
TERMINAL RESERVOIR
GENERAL LEGEND

CALIFORNIA
AMERICAN WATER

AECOM
1333 BROADWAY, SUITE 800
OAKLAND, CALIFORNIA 94612

DRAWN BY C. SOMERA
PROJECT ENG'R T. PENG
APPROVED C. SMITH

DATE SEPTEMBER 2015 USE DIMENSIONS ONLY
PROJECT 60424498 SCALE AS SHOWN

USE APPROVED DRAWINGS ONLY FOR CONSTRUCTION PURPOSES

5005G03

10005005G05

F:\Work\CAL-Am-MPWSP\Terminal-Reservoir\1 Sheets\5005G05.dwg Christina Somera Sep 16, 2015 - 9:45pm

GENERAL YARD PIPING AND UTILITIES NOTES:

1. EXISTING UNDERGROUND UTILITIES OBTAINED FROM AS–BUILTS AND FROM FIELD SURVEY.
2. FIELD VERIFY DEPTH AND LOCATION OF UTILITIES PRIOR TO EXCAVATION.
3. PROTECT ALL EXISTING UTILITIES DURING CONSTRUCTION.
4. ALL PIPES SHALL HAVE A CONSTANT SLOPE BETWEEN INVERT ELEVATIONS UNLESS A FITTING IS SHOWN.
5. TRAFFIC CONTROL COSTS SHALL BE INCLUDED IN THE BID. PROCEDURES SHALL CONFORM TO THE REQUIREMENTS OF THE LOCAL JURISDICTION, CALTRANS, IN ACCORDANCE WITH ALL APPLICABLE PERMITS, AND WITH THE SPECIFICATIONS.
6. CONSTRUCTION ACTIVITY SHALL BE LIMITED TO THE HOURS REFERENCED IN THE SPECIFICATIONS AND PERMITS.
7. MAKE ARRANGEMENTS FOR EQUIPMENT, MATERIAL STORAGE & YARD SECURITY.
8. EMERGENCY SERVICES (POLICE, FIRE, AMBULANCE) SHALL BE ALERTED 48 HOURS IN ADVANCE OF PERFORMING SHUTDOWN.
9. THE TERM "FUTURE" AS INDICATED ON THE DRAWINGS REFERS TO THE ENGINEER'S INTERPRETATION OF THE ITEM FOR THE FUTURE, BASED ON AVAILABLE INFORMATION.

TOPOGRAPHIC MAPPING:

THE TOPOGRAPHIC/PLANIMETRIC MAPPING SHOWN HEREON WAS COMPILED BY AERIAL PHOTOMAPPING SERVICES USING AERIAL PHOTOGRAPHY DATED 12/23/14 AT THE REQUEST OF URS/AECOM. THIS STRIP MAPPING BEGINS AT PACIFIC GROVE TO THE SOUTH AND CONTINUES NORTH WHERE IT ENDS AT THE MARINA WWTP.
CONTROL WAS PROVIDED BY POLARIS CONSULTING, CARMEL VALLEY, CA 831–659–9564

SURVEY NOTES:

THIS SURVEY LOCATED GROUND AND SURFACE FEATURES WITHIN THE PROJECT LIMITS DEFINED BY AECOM. THE SITE IS COVERED WITH DENSE SCRUB BRUSH THAT WAS NOT LOCATED AS PART OF THE SURVEY.

THE COORDINATES FOR THIS PROJECT ARE DERIVED FROM GPS OBSERVATIONS OVER A TWO MONTH PERIOD FROM NOVEMBER TO DECEMBER OF 2014. EQUIPMENT UTILIZED WAS A LEICA GS–14 GPS ROVER AND A LEICA 1200 GPS ROVER. THE MEASUREMENTS WERE OBTAINED USING THE LEICA REAL TIME NETWORK, SMARTNET, AS THE BASE STATION. DATA WAS DOWNLOADED AND POST PROCESSED FOR THE SMARTNET–MONTEREY BASE STATION AND THREE LOCAL CORS STATIONS FOR TWO SEPARATE DAYS. THESE OBSERVATIONS WERE POST PROCESSED TO OBTAIN COORDINATES FOR THE MONTEREY BASE STATION.

THE COORDINATES WERE PROCESSED FROM THE PUBLISHED DATUM FOR THE CONTROL STATION (NAD 83(2011) EPOCH 2010.00) TO A MORE CURRENT DATUM (NAD 83(2011) EPOCH 2014.25) USING THE HORIZONTAL TIME–DEPENDENT POSITIONING (HTDP) TOOL PROVIDED BY NGS ON THEIR WEB SITE.

EACH CONTROL POINT IS MEASURED AT LEAST FOUR TIMES AT TWO DIFFERENT TIMES OF DAY TO CAPTURE DIFFERENT SATELLITE CONFIGURATIONS. THE DATA WAS ANALYZED TO BE SURE THAT THE MEAN VALUES OBTAINED USING LEICA SMARTWORX SOFTWARE FOR ALL COORDINATES WERE WITHIN LESS THAN +/–0.035' HORIZONTALLY AND +/–0.05' VERTICALLY.

ELEVATIONS ARE BASED ON NORTH AMERICAN VERTICAL DATUM 1988 (NAVD88) AT NATIONAL GEODETIC SURVEY (NGS) BENCHMARK PID GU4116 DESIGNATED 941 3450M TIDAL WITH AN ELEVATION OF 11.70 FEET.

BASIS OF BEARINGS

BEARINGS ARE BASED ON THE MERIDIAN OF THE CALIFORNIA STATE PLANE COORDINATE SYSTEM, ZONE 4, NAD 83 (2011), EPOCH 2014.25. THEY ARE DERIVED FROM NATIONAL GEODETIC SURVEY CONTINUOUSLY OPERATING REFERENCE STATIONS (NGS CORS) DATA PROCESSED USING HORIZONTAL TIME–DEPENDENT POSITIONING (HTDP) FROM NAD 83(2011) EPOCH 2010.00 TO NAD 83(2011) EPOCH 2014.25.

CORS STATIONS UTILIZED WERE ELKHORN SLOUGH (DI7526 DESIGNATION – ELKHRNSLGHCN2005 CORS ARP), SANTA LUCIA (DH3876 DESIGNATION – SANTALUCIACN2004 CORS ARP) AND HOPKINS (DN7560 DESIGNATION –HOPKINSSTNCN2006 CORS ARP).

WATER GENERAL NOTES:

1. ALL MATERIALS, CONSTRUCTION PROCEDURES AND APPURTENANCES SHALL CONFORM TO THE LATEST REQUIREMENTS OF THE PROJECT SPECIFICATIONS, PROJECT DRAWINGS, UTILITIES STANDARDS AND STANDARD SPECIFICATIONS OF CAW.
2. ALL EXISTING WATER VALVES AND FIRE HYDRANTS REMOVED FROM THE ABANDONED SYSTEM BY THE CONTRACTOR SHALL BE SALVAGED AND DELIVERED TO THE CAW CORPORATION YARD.
3. CONTRACTOR SHALL CLOSE ALL VALVES OF ABANDONED PIPELINES, REMOVE VALVE BOX FOR EACH ABANDONED VALVE, FILL RISER WITH CDF, AND PLACE CONCRETE OR A.C. PATCH OVER EACH HOLE CREATED BY REMOVAL OF EXISTING VALVE BOX.
4. SHUTDOWN OF ALL UTILITIES WILL BE PREFORMED BY OR UNDER THE DIRECTION OF CAW OPERATIONS DIVISION. ADVANCE NOTICE OF 5 WORKING DAYS IS REQUIRED FOR SHUTDOWNS.
5. CONTRACTOR SHALL INSTALL APPROPRIATE 2" CORPORATION STOPS AND SADDLES TO BLEED AIR, PERFORM BACTERIOLOGICAL AND CHLORINATION TESTS.
6. TRENCH BACKFILL STANDARD DETAIL FOR SHALLOW WATER MAINS SHALL APPLY AND GOVERN FOR ALL LOCATIONS WHERE DEPTH OF COVER OF NEW WATER MAINS IS LESS THEN 3 FEET.
7. ALL FIRE SERVICES SHALL BE POTHOLED BY THE CONTRACTOR PRIOR TO RECONNECTION FOR POSSIBLE CONFLICTS, ALL FIRE SERVICE RECONNECTS SHALL HAVE RESTRAINED JOINTS FROM THE TEE TO THE FIRST FITTING AFTER THE VALVE. CONTRACTOR SHALL FURNISH SHOP DRAWINGS OF HOW RECONNECTION WILL BE CONSTRUCTED AND SHALL INFORM NEAREST CITY FIRE STATION AND CITY COMMUNICATIONS CENTER OF THE FIRE SERVICE WORK AND MAKE ANY NECESSARY SCHEDULE ARRANGEMENTS TO ACCOMMODATE CUSTOMER'S NEEDS.
8. UNDER NO CIRCUMSTANCE SHALL PIPE MATERIAL BE INSTALLED DEFLECTED OTHER THAN AT THE JOINTS, PER PROJECT SPECIFICATIONS.
9. UNLESS OTHERWISE NOTED, EACH ADDRESS SHALL HAVE A WATER SERVICE CONNECTION. EXISTING WATER SERVICES MAY NOT BE SHOWN ON THE DRAWINGS.

RIGHT OF WAY IMPROVEMENT AND RESTORATON:

1. ALL IMPROVEMENTS IN THE PUBLIC RIGHT OF WAY SHALL BE RESTORED IN KIND TO PRIOR CONDITION. UNLESS OTHERWISE NOTED ON THE DRAWINGS, ALL IMPROVEMENTS WITHIN THE PUBLIC EASEMENT SUCH AS STREETS SHALL MEET THE LOCAL CITY AND COUNTY STANDARDS.
2. REFERENCE DRAWINGS MAY BE OBSOLETE. IT IS THE RESPONSIBILITY OF THE CONTRACTOR TO OBTAIN THE LATEST CITY AND COUNTY STANDARDS.
3. THE CONTRACTOR SHALL TAKE ALL PRECAUTIONS NECESSARY TO PROTECT EXISTING IMPROVEMENTS. ALL SUCH IMPROVEMENTS OR STRUCTURES DAMAGED BY THE CONTRACTOR'S OPERATIONS SHALL BE REPAIRED OR RECONSTRUCTED TO ORIGINAL DESIGN CONDITION AND/OR AS SPECIFIED AT THE CONTRACTOR'S EXPENSE.
4. THE CONTRACTOR SHALL LIMIT CONSTRUCTION OPERATIONS TO WITHIN THE RIGHT–OF–WAY AND EASEMENTS AND DESIGNATED WORK AREAS AS INDICATED. THE CONTRACTOR IS SOLELY RESPONSIBLE FOR ANY DAMAGES OUTSIDE THE RIGHT–OF–WAY, EASEMENTS, AND DESIGNATED WORK AREAS SHOWN ON THE DRAWINGS.

DEMOLITION NOTES:

1. CLEAR AND REMOVE ALL ORGANIC MATTER, DEBRIS, AND RUBBISH FROM WITHIN THE LIMIT OF WORK. CONTRACTOR SHALL DISPOSE OF SAID MATERIAL IN A LEGAL MANNER AS HIS PROPERTY.
2. CONTRACTOR MAY RE–USE MATERIAL SUBJECT TO SUBMITTALS PER SPECIFICATION AND REVIEW BY THE ENGINEER.
3. ALL EXCAVATION WORK WITHIN DRIP LINE OF EXISTING TREES THAT ARE TO REMAIN SHALL BE DONE BY HAND PER SPECIFICATIONS AND PROJECT PERMITS. CLEANLY CUT ANY ROOT LARGER THAN ONE INCH DIAMETER. DO NOT TEAR ROOTS.

REGISTERED PROFESSIONAL ENGINEER CRAIG JEFFERY SMITH No. 70883 Exp. 6-30-17 CIVIL STATE OF CALIFORNIA

REVISIONS

TRANSMISSION MAINS FOR MPWSP
GENERAL
TERMINAL RESERVOIR
GENERAL NOTES 1 OF 2

CALIFORNIA
AMERICAN WATER

URS CORPORATION
1333 BROADWAY, SUITE 800
OAKLAND, CALIFORNIA 94612

AECOM

CALIFORNIA AMERICAN WATER

DRAWN BY R. YIP
PROJECT ENG'R T. PENG
APPROVED C. SMITH

DATE SEPTEMBER 2015 USE DIMENSIONS ONLY
PROJECT 60424498 SCALE AS SHOWN

USE APPROVED DRAWINGS ONLY FOR CONSTRUCTION PURPOSES

5005G04

10005005G02

F:\Work\CAL-Am-MPWSP\Terminal-Reservoir\1 Sheets\5005G02.dwg Christina Somerg Sep 16, 2015 - 9:45pm

PIPELINE CONSTRUCTION NOTES:

1. PROVIDE TRAFFIC CONTROL IN ACCORDANCE WITH THE PROJECT SPECIFICATIONS.
2. OPEN TRENCHES IN EXISTING ASPHALT AREAS SHALL BE PLATED OVERNIGHT WITH NON SKID STEEL PLATES.
3. UNLESS OTHERWISE NOTED, STATION ON PLANS REFERS TO CENTERLINE OF ROADWAY AND IS BASED ON HORIZONTAL DISTANCES.
4. EXISTING UTILITY LOCATIONS ARE APPROXIMATE AND BASED ON RECORD DRAWINGS. POTHOLE AND SURVEY EXISTING UTILITIES THAT WILL BE AFFECTED BY TRENCHING OR EXCAVATIONS PRIOR TO ORDERING ANY MATERIALS. POTHOLE AND SURVEY DATA SHALL BE PROVIDED TO THE ENGINEER FOR REVIEW. POTHOLE DATA SHALL INCLUDE EXISTING UTILITY HORIZONTAL LOCATION, PIPE ELEVATION, SIZE, PIPE ANGULAR CONFIGURATION, AND MATERIALS OF CONSTRUCTION. IDENTIFY POTENTIAL CONFLICTS WITH THE NEW PIPE LOCATION. PIPE ALIGNMENT ADJUSTMENTS THAT DO NOT INCREASE OVERALL PIPE OR FITTING QUANTITIES SHALL BE MADE AT NO ADDITIONAL COST TO THE DISTRICT.
5. FIELD VERIFY THE HORIZONTAL AND VERTICAL LOCATION, DIAMETER, AND ORIENTATION AT ALL CONNECTION POINTS AND COORDINATE WITH THE DISTRICT PRIOR TO CONSTRUCTION. PROVIDE ALL PIPE MATERIALS AND FITTINGS, AS REQUIRED TO MEET EXISTING FIELD CONDITIONS FOR A COMPLETE INSTALLATION.
6. REPAIR DAMAGE TO LANDSCAPING, PAVING, UTILITIES, CURBS, GUTTERS, IRRIGATION, STRUCTURES, ETC., CAUSED BY THE WORK.
7. PAVEMENT CUTS SHALL BE PERFORMED BY SAW CUTTING OR GRINDING. RECUT PAVEMENT PRIOR TO REPAVING WHERE UNDERMINING HAS OCCURRED.
8. REPLACE TRAFFIC STRIPING OR STENCILING THAT IS OBLITERATED BY CONSTRUCTION TO THE SATISFACTION OF THE OWNER AND LOCAL MUNICIPALITY.
9. SCHEDULE LOCAL WATER SERVICE SHUTDOWNS WITH THE OWNER NOT LESS THAN TWO WEEKS IN ADVANCE. SERVICE SHALL NOT BE SHUTDOWN FOR MORE THAN 6 HOURS.
10. MAINTAIN 48" MINIMUM PIPELINE COVER UNLESS OTHERWISE SHOWN ON THE PLANS OR UNLESS REDUCED DEPTH IS SPECIFICALLY APPROVED BY THE ENGINEER.
11. REFER TO SPECIFICATIONS FOR PRESSURE TESTING REQUIREMENTS.
12. REMOVAL AND REPLACEMENT OF PAVEMENT SHALL BE IN ACCORDANCE WITH THE SPECIFICATIONS
13. TRENCHES SHALL BE BACKFILLED IN ACCORDANCE WITH THE LOCAL MUNICPAL STANDARDS.
14. HORIZONTAL STATIONING ALONG THE PIPELINE ALIGNMENT IS FOR LEVEL LINE MEASUREMENT AND FOR PAYMENT OF THE PIPELINES. FURNISH AND INSTALL THE ACTUAL PIPE LENGTH TO BE DETERMINED BY THE SLOPE OR CURVE ON WHICH THE PIPE IS INSTALLED.
15. RESTRAINED JOINTS SHALL BE PROVIDED FOR BURIED PIPING AS INDICATED ON THE DRAWINGS OR AS SCHEDULED IN THE SPECIFICATIONS. NOT ALL THRUST BLOCKS ARE SHOWN ON THE DRAWINGS. THRUST BLOCKS SHALL BE PROVIDED AT ALL HORIZONTAL AND VERTICAL BENDS, REDUCERS, TEES, CROSSES, VALVES; AND END PIPES. UNLESS NOTED OTHERWISE, AXIALTHRUST BLOCKS SHALL BE PROVIDED FOR ALL TURNOUTS AND BLOWOFFS.
16. ALL VALVE BOXES SHALL BE SET TO FINISH GRADE.
17. ALL TRENCH EXCAVATION SHALL COMPLY WITH THE MOST CURRENT OCCUPATIONAL SAFETY AND HEALTH ADMINISTRATION STANDARDS.
18. DELETERIOUS MATERIALS AND EXCAVATED MATERIALS NOT USED IN BACKFILL OR GRADING SHALL BE REMOVED FROM SITE AND LEGALLY DISPOSED OF.
19. CONCRETE TRUCKS SHALL BE CLEANED IN DESIGNATED AREAS WITH WATER PROOF LINING IN COMPLIANCE WITH THE SWPPP AND OTHER PERMITS. ALL WASTE AND MATERIAL SHALL BE REMOVED FROM SITE AND LEGALLY DISPOSED OF.PRESSURE TEST WATER LINES ONLY AFTER ALL UTILITIES ARE INSTALLED AND BACKFILL IS ACCEPTED. PRESSURE TEST SHALL BE IN ACCORDANCE WITH THE SPECIFICATIONS.
20. DISINFECTION OF WATER LINES SHALL BE IN ACCORDANCE WITH SPECIFICATIONS.
21. ALL NEW WATER PIPES SHALL BE PROPERLY FLUSHED, PRESSURE TESTED, CHLORINATED AND BACTERIOLOGICALLY TESTED PER THE SPECIFICATIONS.

GENERAL NOTES

1. WORK ON THIS PROJECT SHALL BE PERFORMED IN ACCORDANCE WITH THE CONTRACT DOCUMENTS.
2. NOTIFY THE OWNER'S REPRESENTATIVE AND ALL OTHER INTERESTED PARTIES AT LEAST FORTY-EIGHT (48) HOURS PRIOR TO THE START OF WORK.
3. AT LEAST FORTY-EIGHT (48) HOURS PRIOR TO COMMENCING UNDERGROUND CONSTRUCTION, CONTACT THE REGIONAL NOTIFICATION CENTER (UNDERGROUND SERVICE ALERT OF NORTHERN CALIFORNIA – U.S.A. AT 1-800-227-2600) AND REQUEST THAT UTILITY OWNERS MARK OR OTHERWISE INDICATE THE LOCATION OF THEIR FACILITIES. BEFORE COMMENCING ANY EXCAVATION, POTHOLE AND EXPOSE THE EXISTING UTILITIES AT ALL CROSSINGS AND AT THE POINT OF TIE-IN; THEN CONTACT THE DISTRICT'S REPRESENTATIVE SO THE ELEVATION OF THE EXISTING FACILITIES CAN BE VERIFIED. TAKE ALL NECESSARY MEASURES TO PROTECT ALL UTILITIES AND ALL STRUCTURES FOUND AT THE SITE.
4. OBTAIN REQUIRED PERMITS AND NECESSARY DISTRICT BUSINESS LICENSE(S) PRIOR TO BEGINNING CONSTRUCTION.
5. DURING CONSTRUCTION, INCLUDING SUSPENSION OF WORK, UNTIL FINAL ACCEPTANCE OF THE PROJECT, OBSERVE, FOLLOW AND IMPLEMENT THE REQUIREMENTS OF THE NPDES AND STORMWATER POLLUTION PREVENTION PROGRAM AND KEEP THE WORK SITE CLEAN AND FREE FROM RUBBISH AND DEBRIS. ALSO ABATE DUST NUISANCE BY CLEANING, SWEEPING AND SPRINKLING WITH WATER AND USING DUST FENCES OR THEIR METHODS AS DIRECTED BY THE DISTRICT'S REPRESENTATIVE THROUGHOUT THE CONSTRUCTION OPERATION.
6. KEEP A STRICT RECORD OF ALL CHANGES AND SUBMIT THIS RECORD TO THE OWNER. ALSO COORDINATE TRANSFERRING "AS-BUILT" INFORMATION ON THE CONTRACT DRAWINGS AND DELIVER OHE CERTIFIED "AS-BUILT" PLANS TO THE OWNER BEFORE THE RELEASE FOR FINAL ACCEPTANCE OF THE PROJECT SHALL BE FILED.
7. EXERCISE DUE CARE TO AVOID INJURY TO EXISTING IMPROVEMENTS OR FACILITIES, UTILITY FACILITIES, ADJACENT PROPERTY, AND TREES AND SHRUBBERY THAT ARE NOT TO BE REMOVED. ALL DAMAGE CAUSED TO DISTRICT & CITY STREETS, INCLUDING HAUL ROUTES, SIDEWALKS, CURBS OR STREET FURNISHINGS, OR TO PRIVATE PROPERTY SHALL BE REPAIRED AT THE SOLE EXPENSE OF THE CONTRACTOR TO THE SATISFACTION OF THE OWNER.
8. DESIGNATE AND KEEP ON THE PROJECT WHILE WORK IS BEING PERFORMED A COMPETENT SUPERINTENDENT WHO SHALL NOT BE REPLACED WITHOUT A WRITTEN NOTICE TO THE OWNER'S REPRESENTATIVE. THE SUPERINTENDENT WILL BE THE CONTRACTOR'S REPRESENTATIVE AT THE SITE AND SHALL HAVE AUTHORITY TO ACT ON BEHALF OF THE CONTRACTOR. COMMUNICATIONS GIVEN TO THE SUPERINTENDENT SHALL BE AS BINDING AS IF GIVEN TO THE CONTRACTOR. DURING PERIODS WHEN THE WORK IS SUSPENDED, MAKE APPROPRIATE ARRANGEMENTS FOR EMERGENCY WORK WHICH MAY BE REQUIRED.
9. WHEN THE WORK ON ANY PORTION OF IT IS SUFFICIENTLY COMPLETE TO BE UTILIZED OR PLACED INTO SERVICE, THE OWNER SHALL HAVE THE RIGHT UPON WRITTEN NOTIFICATION TO THE CONTRACTOR TO UTILIZE SUCH PORTIONS OF THE WORK AND TO PLACE THE OPERABLE PORTIONS INTO SERVICE AND TO OPERATE SAME. UPON SAID NOTICE AND COMMENCEMENT OF UTILIZATION OR OPERATION BY THE DISTRICT, THE CONTRACTOR SHALL BE RELIEVED OF THE DUTY OF MAINTAINING THE PORTIONS SO UTILIZED OR PLACED INTO OPERATION; PROVIDED, HOWEVER, THAT NOTHING IN THIS NOTE SHALL BE CONSTRUED AS RELIEVING THE CONTRACTOR OF THE FULL RESPONSIBILITY FOR COMPLETING THE WORK IN ITS ENTIRETY, FOR MAKING GOOD DEFECTIVE WORK AND MATERIALS, FOR PROTECTING THE WORK FROM DAMAGE, AND FOR BEING RESPONSIBLE FOR DAMAGE.
10. IN ACCORDANCE WITH GENERALLY ACCEPTED CONSTRUCTION PRACTICES, THE CONTRACTOR SHALL BE SOLELY AND COMPLETELY RESPONSIBLE FOR CONDITIONS OF THE JOB SITE, INCLUDING SAFETY OF PERSONS AND PROPERTY DURING PERFORMANCE OF THE WORK; AND FULLY COMPLY WITH STATE, FEDERAL AND OTHER LAWS, RULES, REGULATIONS, AND ORDER RELATING TO SAFETY OF WORKERS AND ALL OTHERS. THIS INCLUDES THE ISSUANCE OF PERSONAL PROTECTIVE EQUIPMENT.
11. UNDERGROUND UTILITIES OR STRUCTURES REPORTED BY THE OWNER OR THOSE SHOWN ON RECORDS EXAMINED ARE INDICATED WITH THEIR APPROXIMATE LOCATION AND EXTENT. TAKE DUE PRECAUTIONARY MEASURES TO PROTECT THE UTILITIES OR STRUCTURES FOUND AT THE SITE. NOTIFY THE OWNERS OF THE UTILITIES CONCERNED BEFORE STARTING WORK.
12. TYPICAL DETAILS APPLY WHETHER OR NOT THEY ARE SPECIFICALLY REFERENCED ON INDIVIDUALPLANS, DETAILS OR SECTIONS.
13. VERIFY DIMENSIONS AND CONDITIONS AT THE SITE BEFORE STARTING WORK. ANY CONFLICT BETWEEN DETAILS OR DIMENSIONS ON THE DRAWINGS SHALL BE REPORTED PROMPTLY TO THE OWNER'S REPRESENTATIVE WHO WILL DETERMINE THE INTENT OF THE DRAWINGS.
14. PROVIDE AND MAINTAIN ON THE WORK SITE SUITABLE SANITATION FACILITIES AND MAKE SAID FACILITIES READILY ACCESSIBLE TO THE WORKERS, THE OWNER AND THE OWNER'S REPRESENTATIVE AT ALL TIMES WHILE WORK IS IN PROGRESS.
15. SUPPORT THE OWNER IN OBTAINING A NOTICE OF INTENT, A STORM WATER POLLUTION CONTROL PLAN AND A SWPPP PLAN IN ACCORDANCE WITH NPDES REGULATIONS, SEE SPECIFICATIONS.
16. NO SMOKING IS ALLOWED WITHIN THE JOBSITE OR SITE ACCESS AREAS. A FIRE SPOTTER, FIRE EXTINGUISHER, ADEQUATE WATER SUPPLY AND SHOVELS SHALL BE AVAILABLE AND WITHIN REACH AT ALL TIMES DURING ANY WELDING OR TORCH WORK. THIS JOBSITE IS IN AN EXTREMELY HAZARDOUS FIRE AREA.
17. VIDEO RECORD AND DOCUMENT THE EXISTING CONDITION OF THE PROJECT LIMITS AND SUBMIT THE RECORDING AND DOCUMENT TO THE OWNER PRIOR TO THE START OF CONSTRUCTION.
18. EXISTING TOPOGRAPHY, STRUCTURES, AND SITE FEATURES ARE SHOWN SCREENED OR LIGHT-LINED. NEW FINISH GRADE, STRUCTURES, AND SITE FEATURES ARE SHOWN HEAVY-LINED.
19. FOR LOCATION OF CONTROL POINTS, SEE CONTROL LAYOUT DRAWINGS.
20. COORDINATES AND DIMENSIONS SHOWN FOR ROADWAY IMPROVEMENTS ARE TO FACE OF CURB OR EDGE OF PAVEMENT.
21. STAGING AREA SHALL BE FOR CONTRACTOR'S EMPLOYEE PARKING, CONTRACTOR'S TRAILERS AND ON-SITE STORAGE OF MATERIALS ONLY FOR THIS PROJECT.
22. PROVIDE TEMPORARY FENCING TO MAINTAIN SECURITY AT ALL TIMES.
23. ELEVATIONS GIVEN ARE TO FINISH GRADE UNLESS OTHERWISE SHOWN.
24. SLOPE UNIFORMLY BETWEEN CONTOURS AND SPOT ELEVATIONS SHOWN.
25. CONDUCT OPERATIONS TO RESULT IN THE LEAST POSSIBLE OBSTRUCTION INCONVENIENCE TO THE PUBLIC, AND HAVE UNDER CONSTRUCTION NO GREATER LENGTH OR AMOUNT OF WORK THAT CAN BE PERFORMED PROPERLY WITH DUE REGARD TO THE RIGHTS OF THE PUBLIC OR AS STATED IN THE PERMITS. CONVENIENT ACCESS TO DRIVEWAYS, HOUSES AND BUILDINGS ALONG THE LINE OF WORK SHALL BE MAINTAINED.

REGISTERED PROFESSIONAL ENGINEER CRAIG JEFFERY SMITH No. 70883 Exp. 6-30-17 CIVIL STATE OF CALIFORNIA

REVISIONS

TRANSMISSION MAINS FOR MPWSP
GENERAL
TERMINAL RESERVOIR
GENERAL NOTES 2 OF 2

CALIFORNIA
AMERICAN WATER

URS CORPORATION
1333 BROADWAY, SUITE 800
OAKLAND, CALIFORNIA 94612

AECOM

CALIFORNIA AMERICAN WATER

DRAWN BY R. YIP
PROJECT ENG'R T. PENG
APPROVED C. SMITH

DATE SEPTEMBER 2015 USE DIMENSIONS ONLY
PROJECT 60424498 SCALE AS SHOWN

USE APPROVED DRAWINGS ONLY FOR CONSTRUCTION PURPOSES

5005G05

10005005G03

F:\Work\CAL-Am-MPWSP\Terminal-Reservoir\1 Sheets\5005G03.dwg Christina Somera Sep 16, 2015 - 9:45pm

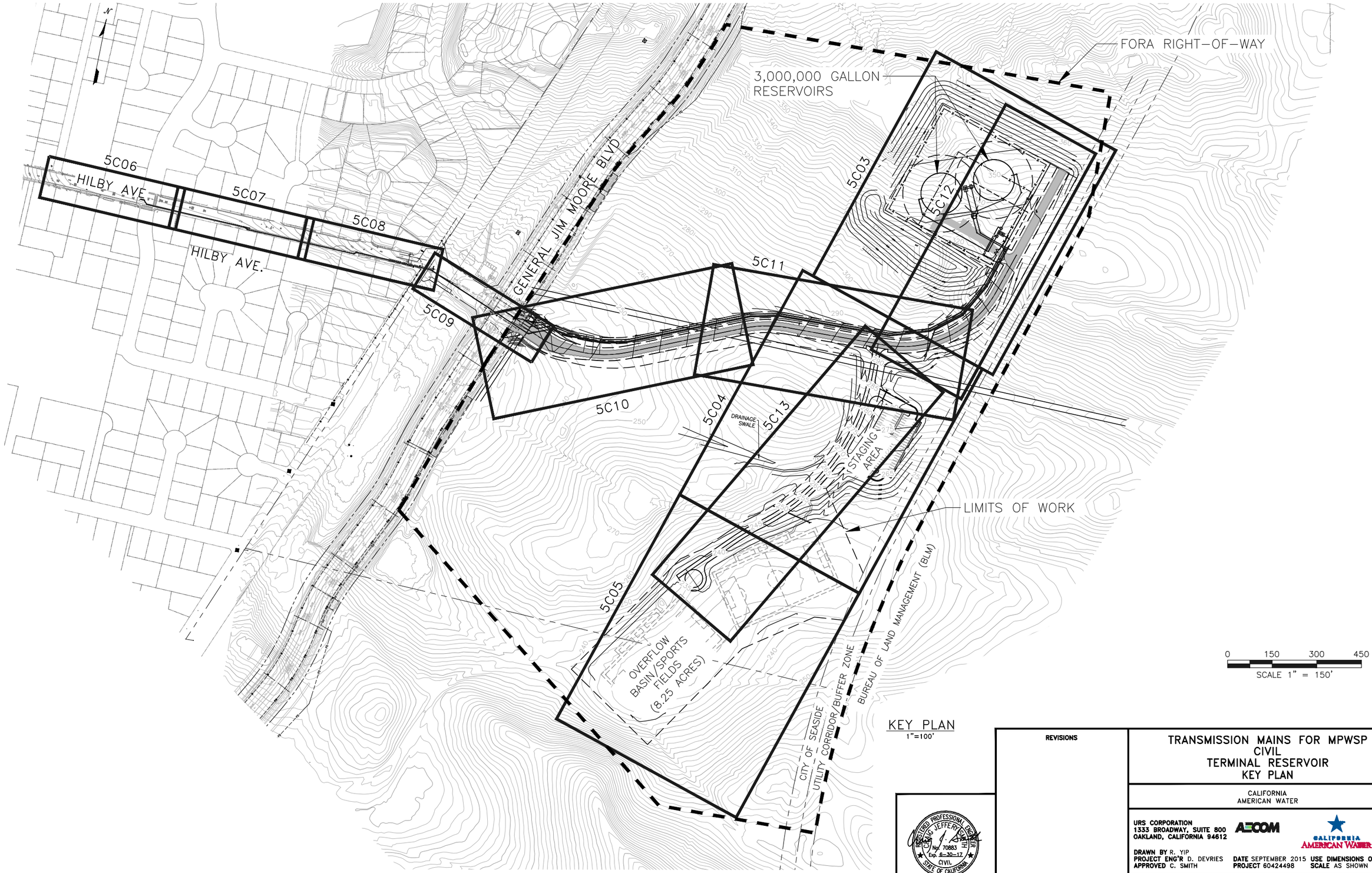

KEY PLAN
1"=100'

REGISTERED PROFESSIONAL ENGINEER
CRAIG JEFFERY SMITH
No. 70883
Exp. 6-30-17
CIVIL
STATE OF CALIFORNIA

REVISIONS

TRANSMISSION MAINS FOR MPWSP
CIVIL
TERMINAL RESERVOIR
KEY PLAN

CALIFORNIA
AMERICAN WATER

URS CORPORATION
1333 BROADWAY, SUITE 800
OAKLAND, CALIFORNIA 94612

AECOM

CALIFORNIA AMERICAN WATER

DRAWN BY R. YIP
PROJECT ENG'R D. DEVRIES
APPROVED C. SMITH

DATE SEPTEMBER 2015
PROJECT 60424498

USE DIMENSIONS ONLY
SCALE AS SHOWN

USE APPROVED DRAWINGS ONLY FOR CONSTRUCTION PURPOSES

5005C01

10005005C01

F:\Work\CAL-Am-MPWSP\Terminal-Reservoir\1 Sheets\5005C01.dwg Christina Somera Sep 16, 2015 - 9:46pm

SURVEY CONTROL			
PT	N	E	ELEV
611	5731225.31	2115134.26	611
612	5731138.53	2114611.98	612
696	5732434.37	2115056.16	295.45
697	5732008.43	2113839.95	226.89
699	5731447.77	2114060.55	195.63

LINE TABLE: ALIGNMENTS				
LINE #	LENGTH	DIRECTION	START POINT (N,E)	END POINT (N,E)
L1	96.95	S66° 51' 42.61"E	(5732266.11,2114417.16)	(5732355.26,2114379.06)
L2	60.17	S87° 14' 30.36"E	(5732424.22,2114363.20)	(5732484.32,2114360.31)
L3	391.15	N68° 14' 55.41"E	(5732643.43,2114386.92)	(5733006.73,2114531.88)
L4	325.45	S89° 52' 06.81"E	(5733160.35,2114561.21)	(5733485.80,2114560.46)
L5	137.72	N18° 47' 09.78"E	(5733827.45,2114804.53)	(5733871.80,2114934.92)
L6	106.08	S0° 07' 53.19"W	(5733465.66,2114560.51)	(5733465.42,2114454.43)
L7	225.78	S45° 29' 26.12"W	(5733102.91,2113826.48)	(5732941.89,2113668.19)

CURVE TABLE: ALIGNMENTS					
CURVE #	RADIUS	LENGTH	CHORD DIRECTION	START POINT (N,E)	END POINT (N,E)
C1	200.00	71.14	S77° 03' 06.48"E	(5732355.26,2114379.06)	(5732424.22,2114363.20)
C2	380.00	162.55	N80° 30' 12.53"E	(5732484.32,2114360.31)	(5732643.43,2114386.92)
C3	412.00	157.35	N79° 11' 24.30"E	(5733006.73,2114531.88)	(5733160.35,2114561.21)
C4	360.00	448.28	N54° 27' 31.49"E	(5733485.80,2114560.46)	(5733827.45,2114804.53)
C5	700.00	654.84	S26° 55' 52.66"W	(5733465.42,2114454.43)	(5733179.52,2113891.66)
C6	700.00	100.68	S49° 36' 39.12"W	(5733179.52,2113891.66)	(5733102.91,2113826.48)

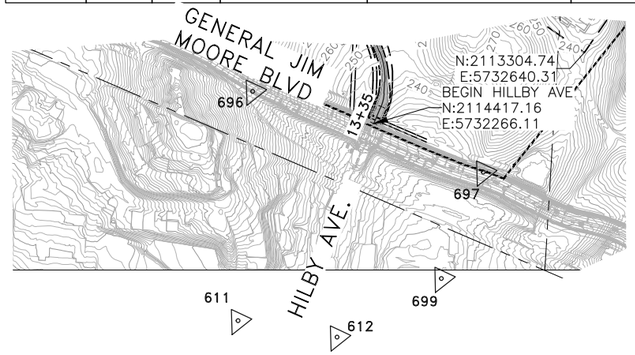

SURVEY CONTROL POINTS
NTS

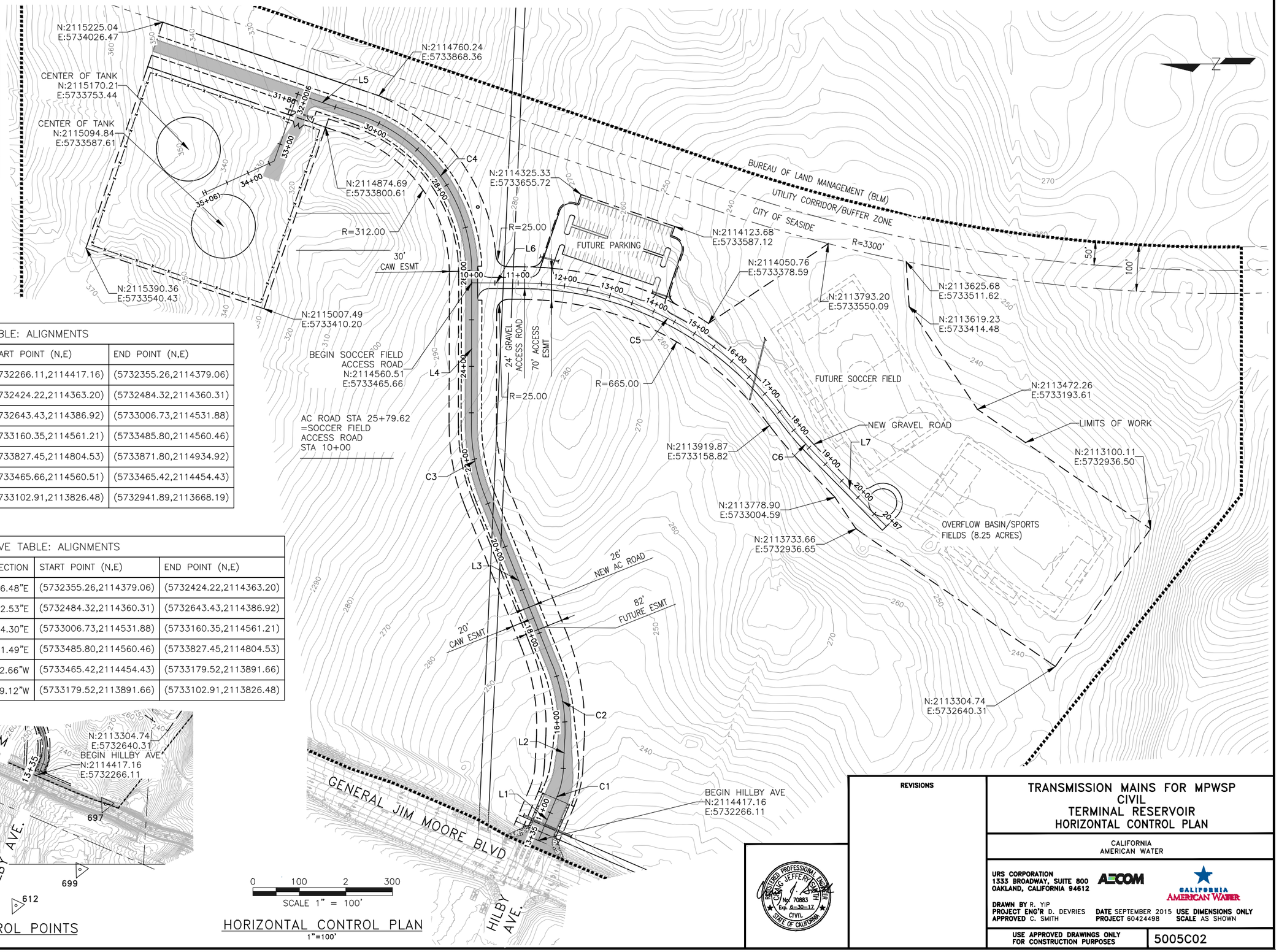

0 100 2 300
SCALE 1" = 100'

HORIZONTAL CONTROL PLAN
1"=100'

REVISIONS

TRANSMISSION MAINS FOR MPWSP
CIVIL
TERMINAL RESERVOIR
HORIZONTAL CONTROL PLAN

CALIFORNIA
AMERICAN WATER

URS CORPORATION
1333 BROADWAY, SUITE 800
OAKLAND, CALIFORNIA 94612

AECOM

CALIFORNIA AMERICAN WATER

REGISTERED PROFESSIONAL ENGINEER
CRAIG JEFFERY SMITH
No. 70883
Exp. 6-30-17
CIVIL
STATE OF CALIFORNIA

DRAWN BY R. YIP
PROJECT ENG'R D. DEVRIES
APPROVED C. SMITH

DATE SEPTEMBER 2015 USE DIMENSIONS ONLY
PROJECT 60424498 SCALE AS SHOWN

USE APPROVED DRAWINGS ONLY FOR CONSTRUCTION PURPOSES

5005C02

10005005C02

F:\Work\CAL-Am-MPWSP\Terminal-Reservoir\1 Sheets\5005C02.dwg Christina Somera Sep 16, 2015 - 9:47am

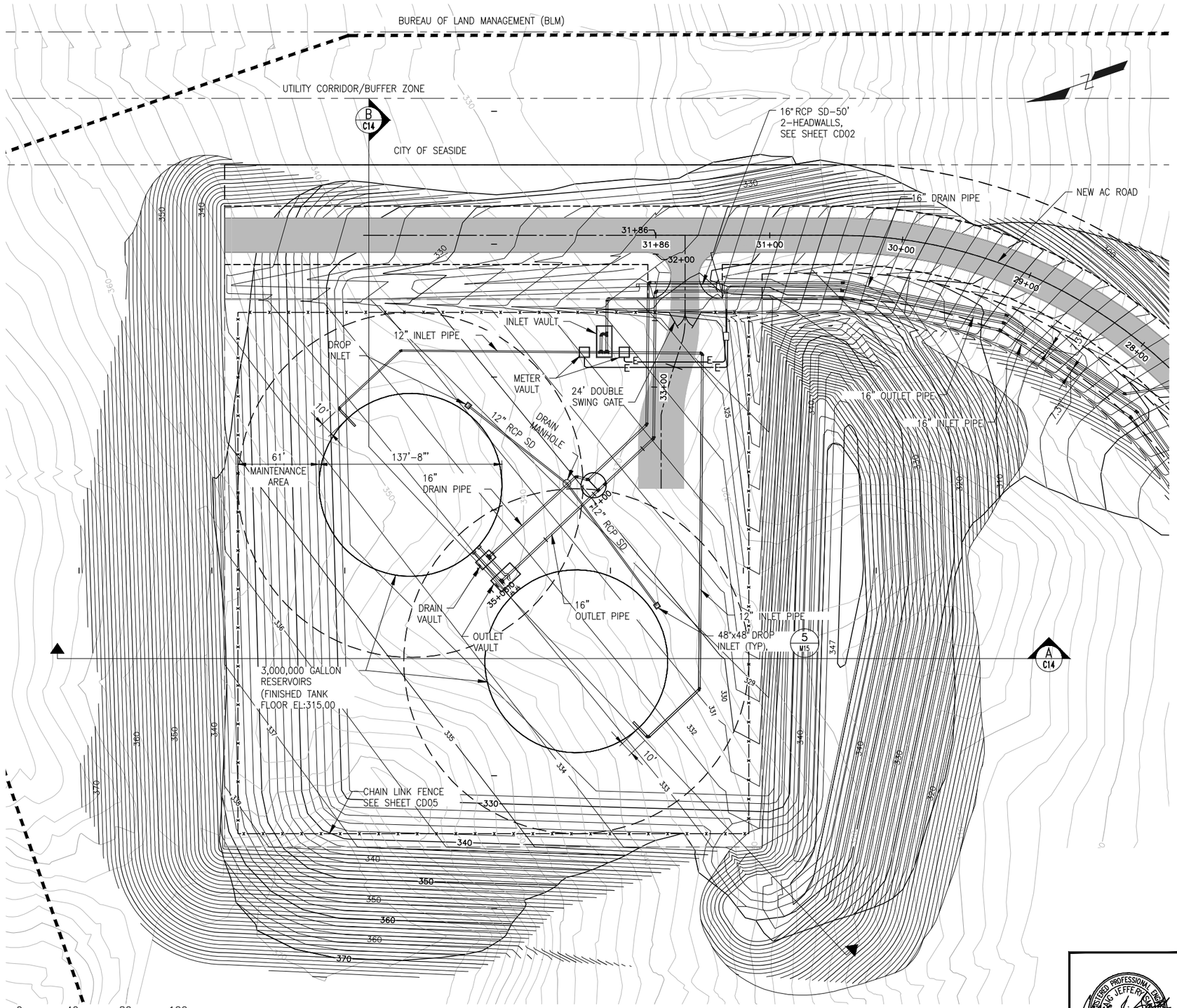

TANK SITE PLAN
1"=40'

GENERAL NOTE:

1. SEE PLAN 5005E04 FOR TANK ELECTRIC PLAN.

REVISIONS

REGISTERED PROFESSIONAL ENGINEER
CRAIG JEFFERY SMITH
No. 70883
Exp. 6-30-17
CIVIL
STATE OF CALIFORNIA

TRANSMISSION MAINS FOR MPWSP
CIVIL
TERMINAL RESERVOIR
TANK SITE PLAN

CALIFORNIA
AMERICAN WATER

URS CORPORATION
1333 BROADWAY, SUITE 800
OAKLAND, CALIFORNIA 94612

AECOM

CALIFORNIA AMERICAN WATER

DRAWN BY R. YIP
PROJECT ENG'R D. DEVRIES
APPROVED C. SMITH

DATE SEPTEMBER 2015
PROJECT 60424498

USE DIMENSIONS ONLY
SCALE AS SHOWN

USE APPROVED DRAWINGS ONLY FOR CONSTRUCTION PURPOSES

5005C03

10005005C03

F:\Work\CAL-Am-MPWSP\Terminal-Reservoir\1 Sheets\5005C03.dwg Christina Somera Sep 16, 2015 - 9:47pm

0 40 80 120

SCALE 1" = 40'

FUTURE PARKING SITE PLAN

1"=40'

REVISIONS

REGISTERED PROFESSIONAL ENGINEER
CRAIG JEFFREY SMITH
No. 70883
Exp. 6-30-17
CIVIL
STATE OF CALIFORNIA

TRANSMISSION MAINS FOR MPWSP
CIVIL
TERMINAL RESERVOIR
FUTURE PARKING SITE PLAN

CALIFORNIA
AMERICAN WATER

URS CORPORATION
1333 BROADWAY, SUITE 800
OAKLAND, CALIFORNIA 94612

AECOM

CALIFORNIA AMERICAN WATER

DRAWN BY R. YIP
PROJECT ENG'R D. DEVRIES
APPROVED C. SMITH

DATE SEPTEMBER 2015
PROJECT 60424498

USE DIMENSIONS ONLY
SCALE AS SHOWN

USE APPROVED DRAWINGS ONLY
FOR CONSTRUCTION PURPOSES

5005C04

F:\Work\CAL-Am-MPWSP\Terminal-Reservoir\1 Sheets\5005C04.dwg Christina Somera Sep 16, 2015 - 9:48am

10005005C04

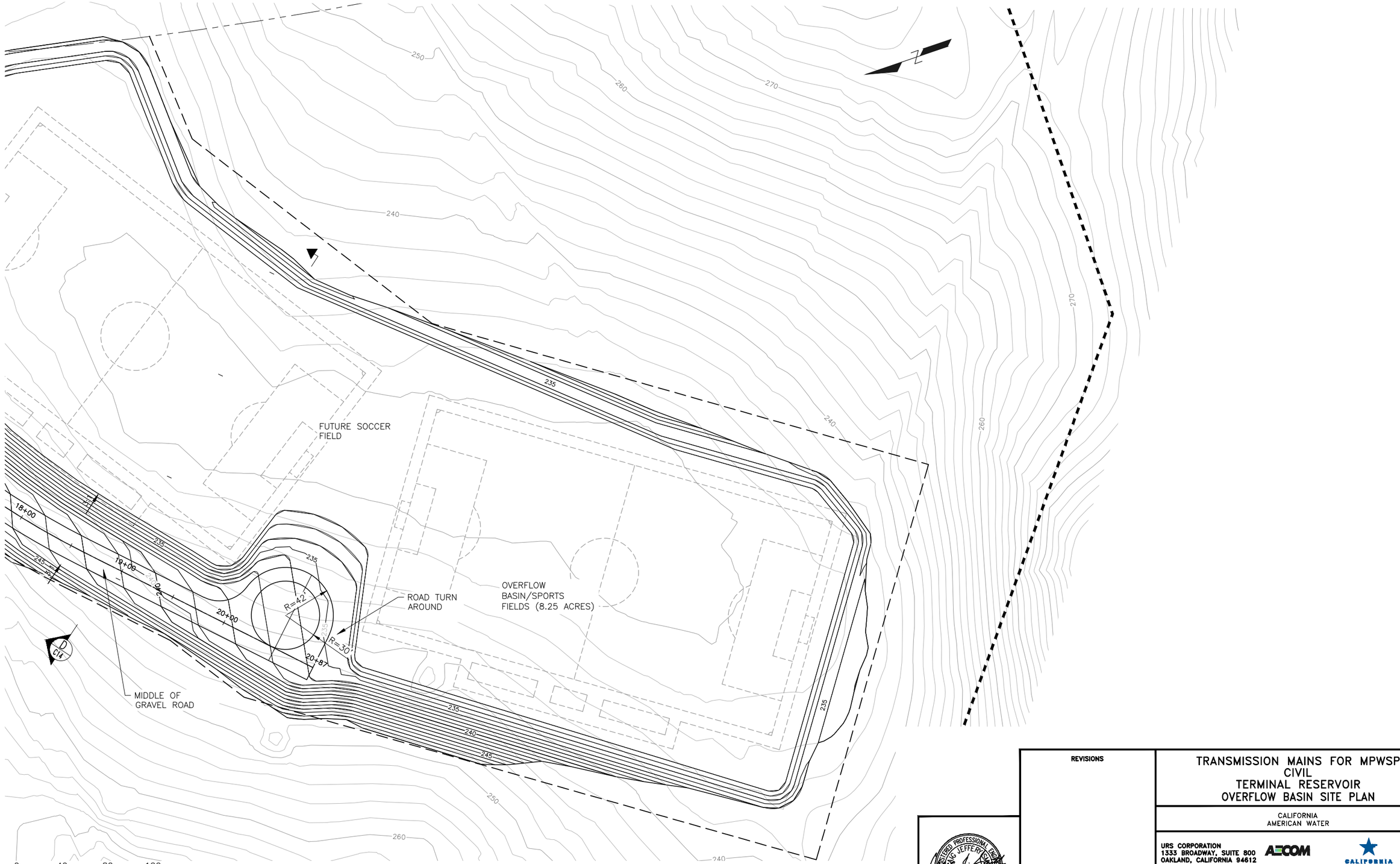

FUTURE PARKING SITE PLAN
1"=40'

REVISIONS

REGISTERED PROFESSIONAL ENGINEER
CRAIG JEFFERY SMITH
No. 70883
Exp. 6-30-17
CIVIL
STATE OF CALIFORNIA

TRANSMISSION MAINS FOR MPWSP
CIVIL
TERMINAL RESERVOIR
OVERFLOW BASIN SITE PLAN

CALIFORNIA
AMERICAN WATER

URS CORPORATION
1333 BROADWAY, SUITE 800
OAKLAND, CALIFORNIA 94612

AECOM

CALIFORNIA AMERICAN WATER

DRAWN BY R. YIP
PROJECT ENG'R D. DEVRIES
APPROVED C. SMITH
DATE SEPTEMBER 2015
PROJECT 60424498
USE DIMENSIONS ONLY
SCALE AS SHOWN

USE APPROVED DRAWINGS ONLY FOR CONSTRUCTION PURPOSES

5005C05

10005005C05

F:\Work\CAL-Am-MPWSP\Terminal-Reservoir\1 Sheets\5005C05.dwg Christina Somero Sep 16, 2015 - 9:48pm

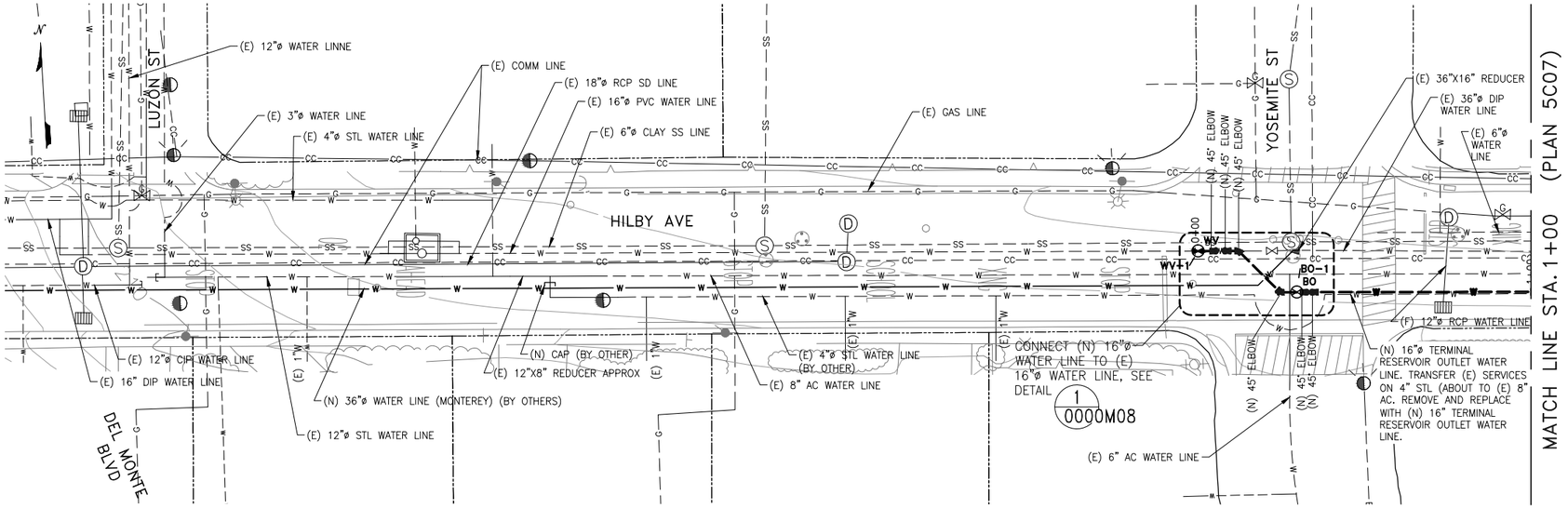

PLAN
1"=20'

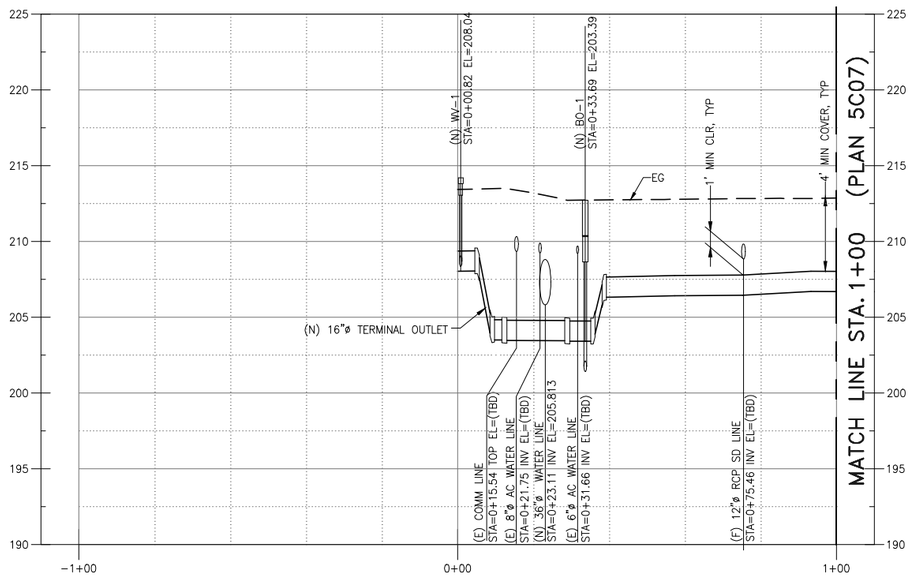

PROFILE
HORIZ 1"=20', VERT 1"=5'

NOTES:

1. THE STATIONING IS BASED ON THE CENTER LINE OF THE NEW 16" WATER LINE.

0 5 15 20
VERT 1" = 5'

0 20 40 60
HORIZ 1" = 20'

F:\Work\CAL-Am-MPWSP\Terminal-Reservoir\1 Sheets\5005C06.dwg Christina Somera Sep 16, 2015 - 9:50pm

REVISIONS

REGISTERED PROFESSIONAL ENGINEER CRAIG JEFFERY SMITH No. 70883 Exp. 6-30-17 CIVIL STATE OF CALIFORNIA

TRANSMISSION MAINS FOR MPWSP
CIVIL
TERMINAL RESERVOIR
PLAN AND PROFILE STA 00+00 TO 1+00

CALIFORNIA
AMERICAN WATER

AECOM
1333 BROADWAY, SUITE 800
OAKLAND, CALIFORNIA 94612

AECOM
CALIFORNIA AMERICAN WATER

DRAWN BY C. SOMERA
PROJECT ENG'R J. HYMAN
APPROVED C. SMITH

DATE SEPTEMBER 2015 **USE DIMENSIONS ONLY**
PROJECT 60424498 **SCALE** AS SHOWN

USE APPROVED DRAWINGS ONLY FOR CONSTRUCTION PURPOSES

5005C06

10005005C06

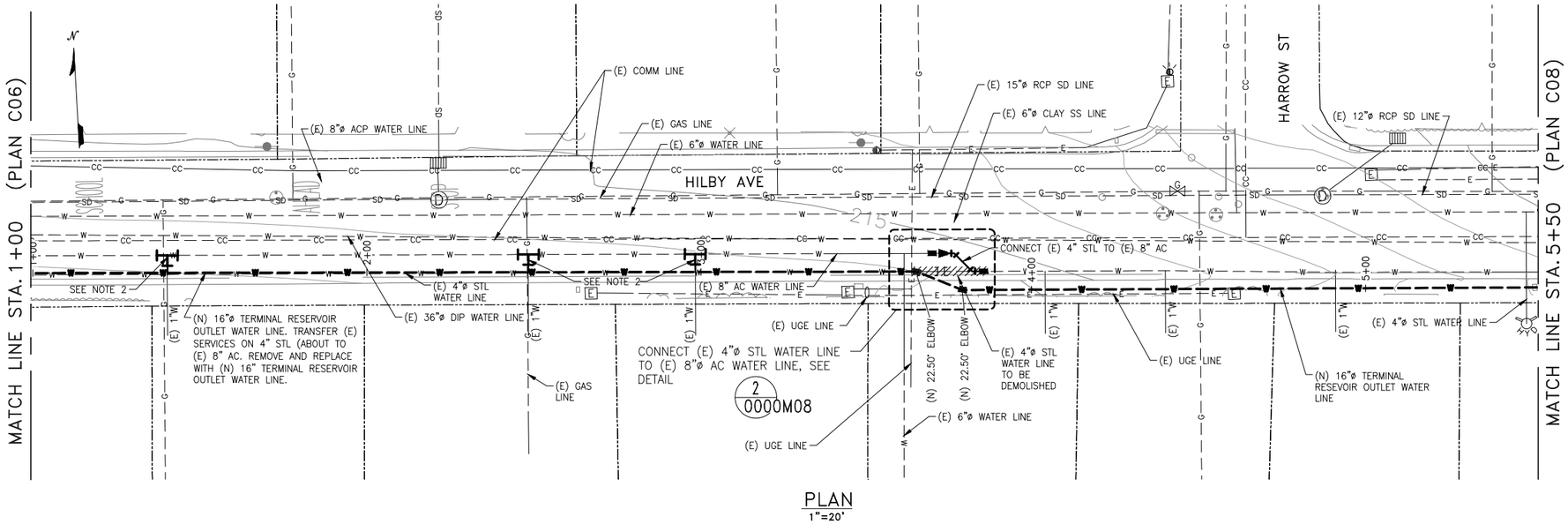

PLAN
1"=20'

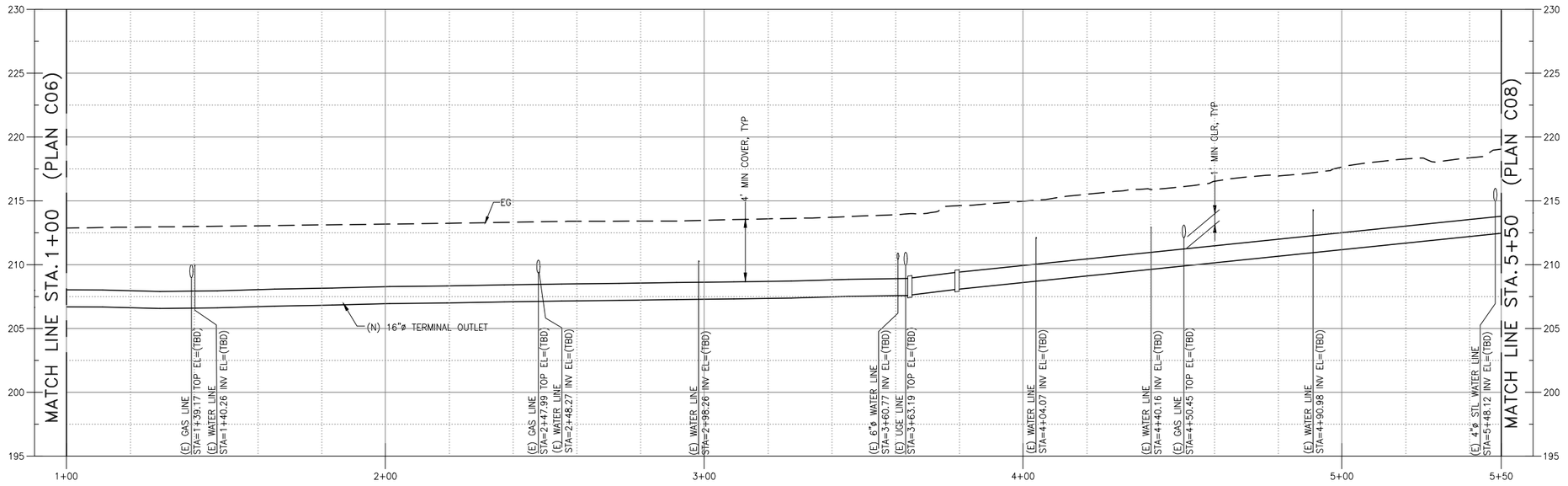

PROFILE
HORIZ 1"=20', VERT 1"=5'

NOTES:

1. THE STATIONING IS BASED ON THE CENTER LINE OF THE NEW 16" WATER LINE.
2. TRANSFER EXISTING SERVICES ON 4 INCH STEEL WATER LINE TO EXISTING 8 INCH AC WATER LINE.

0 5 15 20
VERT 1" = 5'

0 20 40 60
HORIZ 1" = 20'

REGISTERED PROFESSIONAL ENGINEER
CRAIG JEFFERY SMITH
No. 70883
Exp. 6-30-17
CIVIL
STATE OF CALIFORNIA

REVISIONS

TRANSMISSION MAINS FOR MPWSP
CIVIL
TERMINAL RESERVOIR
PLAN AND PROFILE STA 1+00 TO 5+50

CALIFORNIA
AMERICAN WATER

AECOM
1333 BROADWAY, SUITE 800
OAKLAND, CALIFORNIA 94612

DRAWN BY C. SOMERA
PROJECT ENG'R J. HYMAN
APPROVED C. SMITH
DATE SEPTEMBER 2015
PROJECT 60424498
USE DIMENSIONS ONLY
SCALE AS SHOWN

USE APPROVED DRAWINGS ONLY FOR CONSTRUCTION PURPOSES

5005C07

10005005C07

F:\Work\CAL-Am-MPWSP\Terminal-Reservoir\1 Sheets\5005C07.dwg Christina Somera Sep 16, 2015 - 9:52pm

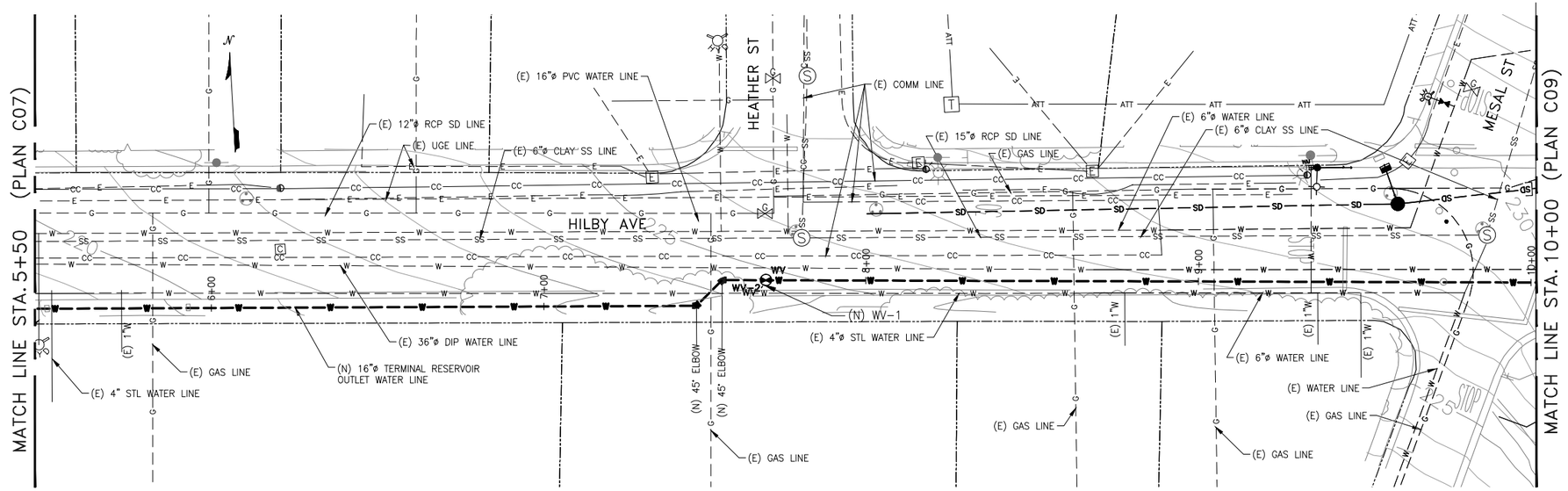

PLAN
1"=20'

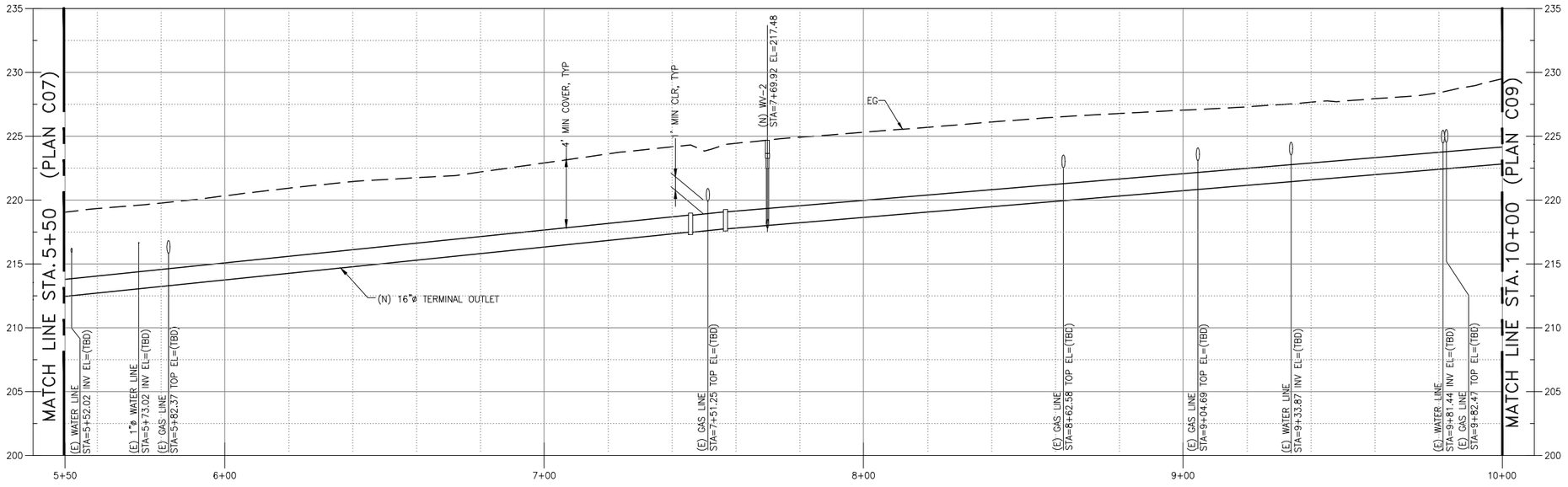

PROFILE
HORIZ 1"=20', VERT 1"=5'

NOTES:

1. THE STATIONING IS BASED ON THE CENTER LINE OF THE NEW 16" WATER LINE.

0 5 10 15
VERT 1" = 5'

0 20 40 60
HORIZ 1" = 20'

REVISIONS

REGISTERED PROFESSIONAL ENGINEER
CRAIG JEFFERY SMITH
No. 70883
Exp. 6-30-17
CIVIL
STATE OF CALIFORNIA

TRANSMISSION MAINS FOR MPWSP
CIVIL
TERMINAL RESERVOIR
PLAN AND PROFILE STA 5+50 TO 10+00

CALIFORNIA
AMERICAN WATER

AECOM
1333 BROADWAY, SUITE 800
OAKLAND, CALIFORNIA 94612

DRAWN BY C. SOMERA
PROJECT ENG'R J. HYMAN
APPROVED C. SMITH

DATE SEPTEMBER 2015 USE DIMENSIONS ONLY
PROJECT 60424498 SCALE AS SHOWN

USE APPROVED DRAWINGS ONLY FOR CONSTRUCTION PURPOSES

5005C08

10005005C08

F:\Work\CAL-Am-MPWSP\Terminal-Reservoir\1 Sheets\5005C08.dwg Christina Somera Sep 16, 2015 - 9:55pm

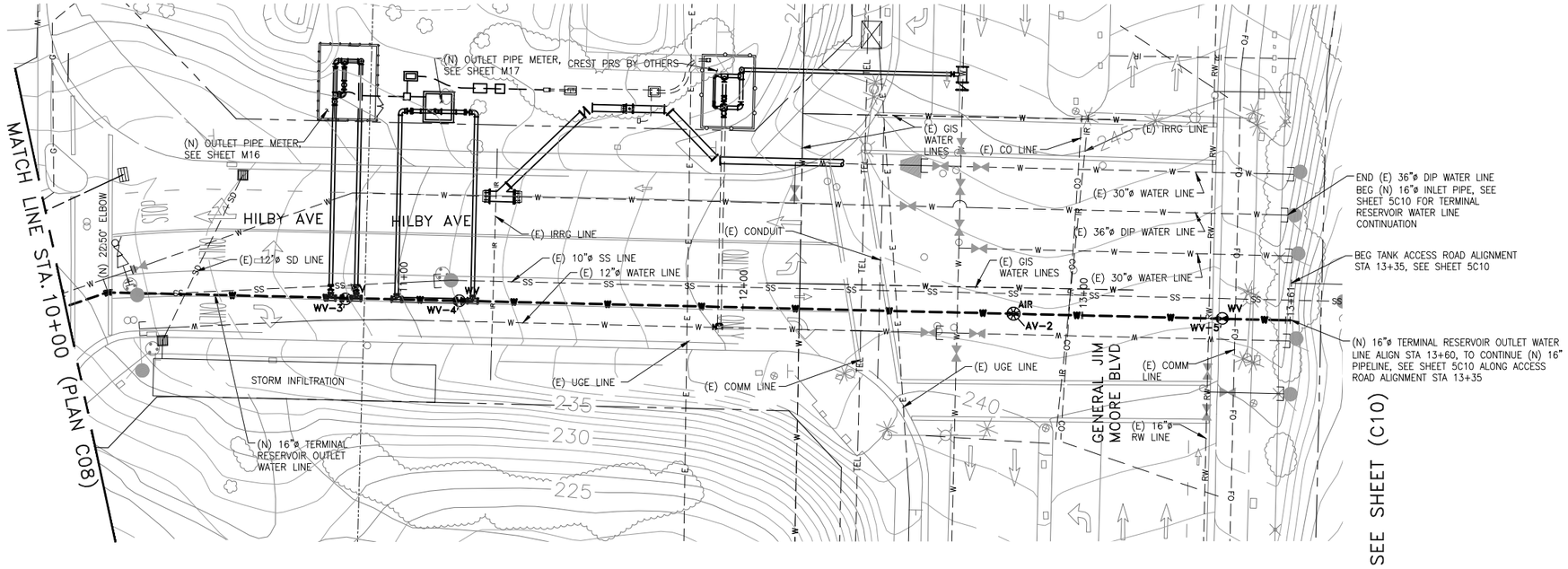

PLAN
1"=20'

PROFILE
HORIZ 1"=20', VERT 1"=5'

VERT 1" = 5' (0, 5, 10, 15)

HORIZ 1" = 20' (0, 20, 40, 60)

NOTES:

1. THE STATIONING IS BASED ON THE CENTER LINE OF THE NEW 16" WATER LINE.

REGISTERED PROFESSIONAL ENGINEER CRAIG JEFFERY SMITH No. 70883 Exp. 6-30-17 CIVIL STATE OF CALIFORNIA

REVISIONS

TRANSMISSION MAINS FOR MPWSP
CIVIL
TERMINAL RESERVOIR
PLAN AND PROFILE STA 10+00 TO 13+35

CALIFORNIA
AMERICAN WATER

AECOM
1333 BROADWAY, SUITE 800
OAKLAND, CALIFORNIA 94612

DRAWN BY C. SOMERA
PROJECT ENG'R J. HYMAN
APPROVED C. SMITH

DATE SEPTEMBER 2015
PROJECT 60424498

USE DIMENSIONS ONLY
SCALE AS SHOWN

USE APPROVED DRAWINGS ONLY FOR CONSTRUCTION PURPOSES

5005C09

F:\Work\CAL-Am-MPWSP\Terminal-Reservoir\1 Sheets\5005C09.dwg Christina Somera Sep 16, 2015 - 9:58am

10005005C09

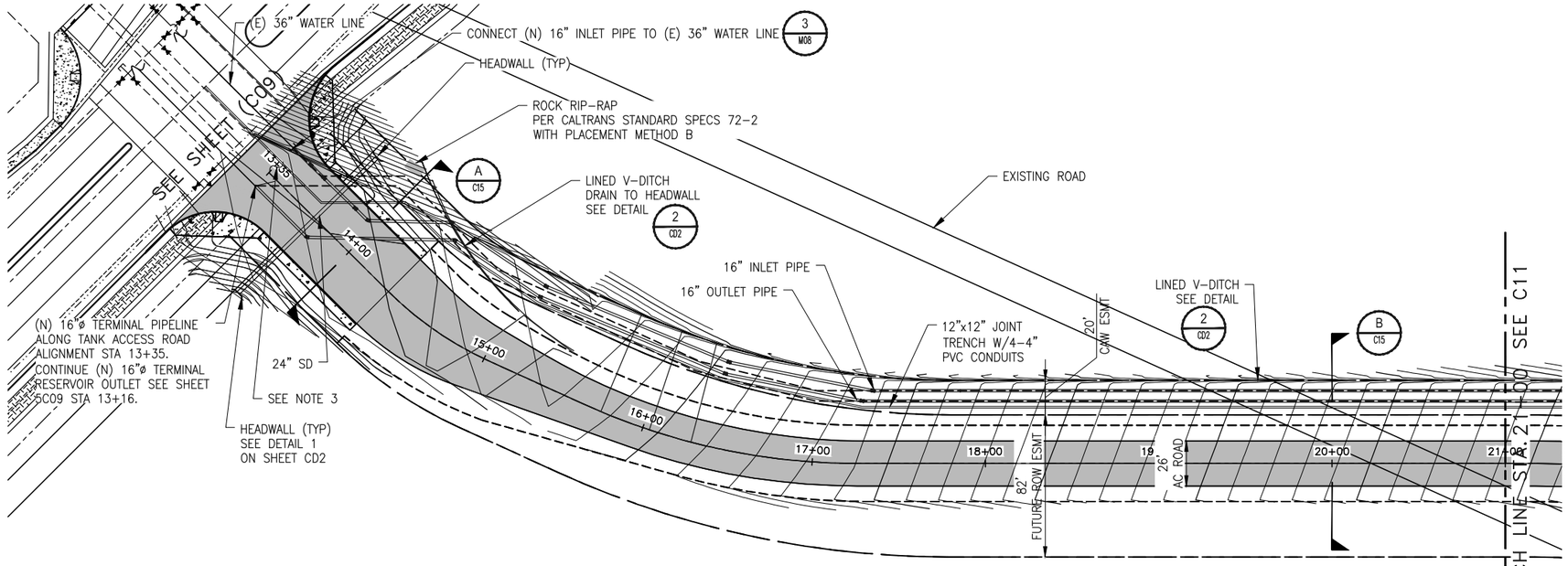

PLAN
1"=40'

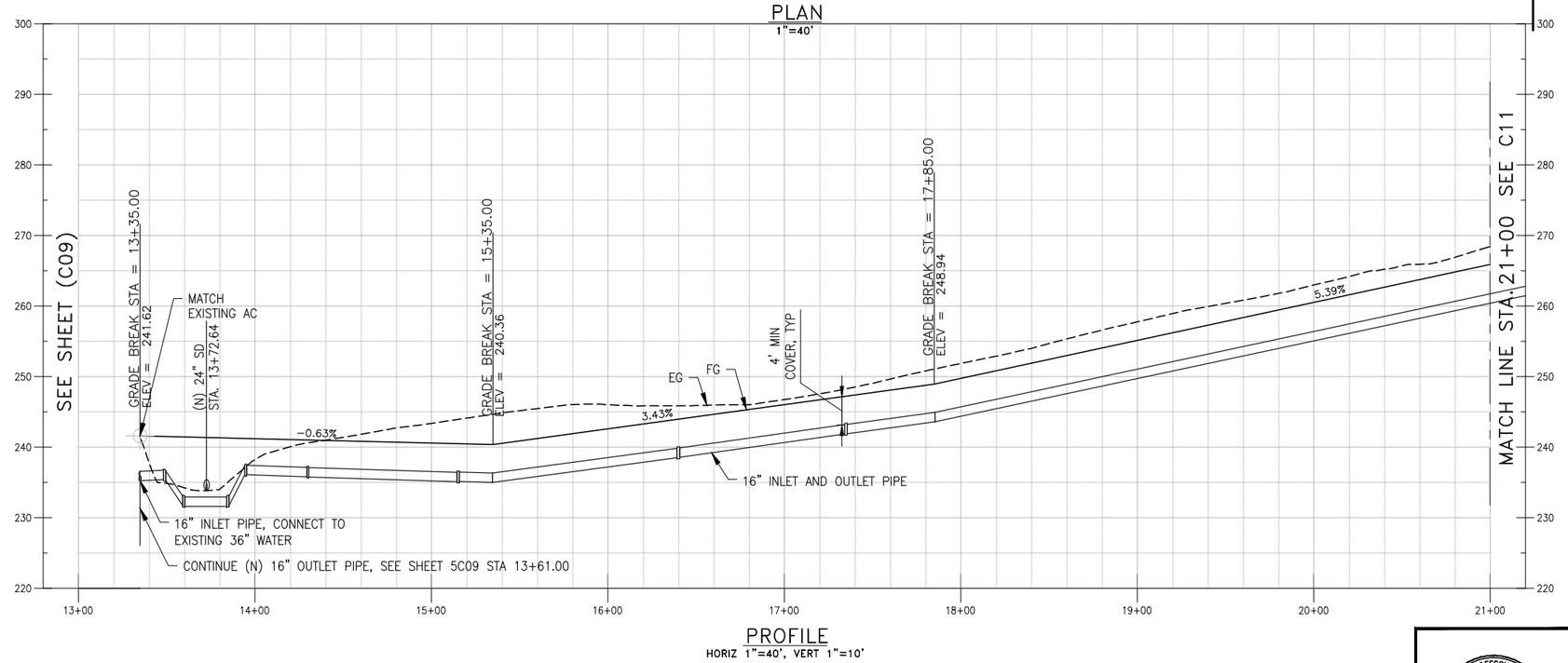

PROFILE
HORIZ 1"=40', VERT 1"=10'

0 10 20 30
VERT 1" = 10'

0 40 80 120
HORIZ 1" = 40'

NOTES:

1. THE STATIONING IS BASED ON THE CENTER LINE OF TANK ACCESS ROAD.
2. SCALE OF HORIZONTAL AND VERTICAL SHOWN ARE CHANGED FROM SCALE ON PLAN C09.
3. FOR CONTINUATION OF 12" x 12" JOINT TRENCH WITH 4-4" PVC CONDUITS, SEE ELECTRICAL DRAWING.

REGISTERED PROFESSIONAL ENGINEER
CRAIG JEFFERY SMITH
No. 70883
Exp. 6-30-17
CIVIL
STATE OF CALIFORNIA

REVISIONS

TRANSMISSION MAINS FOR MPWSP
CIVIL
TERMINAL RESERVOIR
TANK ACCESS ROAD PLAN AND PROFILE-1

CALIFORNIA
AMERICAN WATER

URS CORPORATION
1333 BROADWAY, SUITE 800
OAKLAND, CALIFORNIA 94612

AECOM

CALIFORNIA AMERICAN WATER

DRAWN BY R. YIP
PROJECT ENG'R D. DEVRIES
APPROVED C. SMITH

DATE SEPTEMBER 2015
PROJECT 60424498

USE DIMENSIONS ONLY
SCALE AS SHOWN

USE APPROVED DRAWINGS ONLY FOR CONSTRUCTION PURPOSES

5005C10

10005005C10

F:\Work\CAL-Am-MPWSP\Terminal-Reservoir\1 Sheets\5005C10.dwg Christina Somero Sep 16, 2015 - 9:59pm

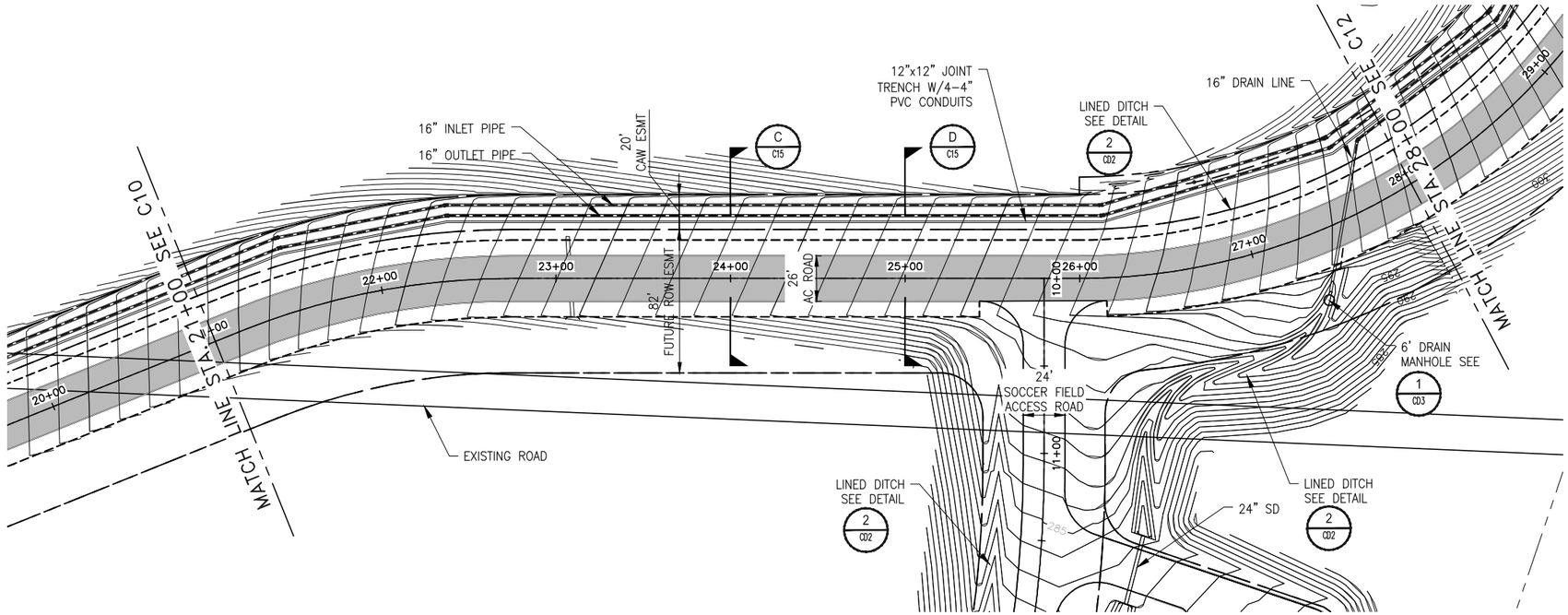

NOTES:

1. THE STATIONING IS BASED ON THE CENTER LINE OF TANK ACCESS ROAD.
2. SCALE OF HORIZONTAL AND VERTICAL SHOWN ARE CHANGED FROM SCALE ON PLAN C09.
3. FOR CONTINUATION OF 12" x 12" JOINT TRENCH WITH 4-4" PVC CONDUITS, SEE ELECTRICAL DRAWING.

PLAN

1"=40'

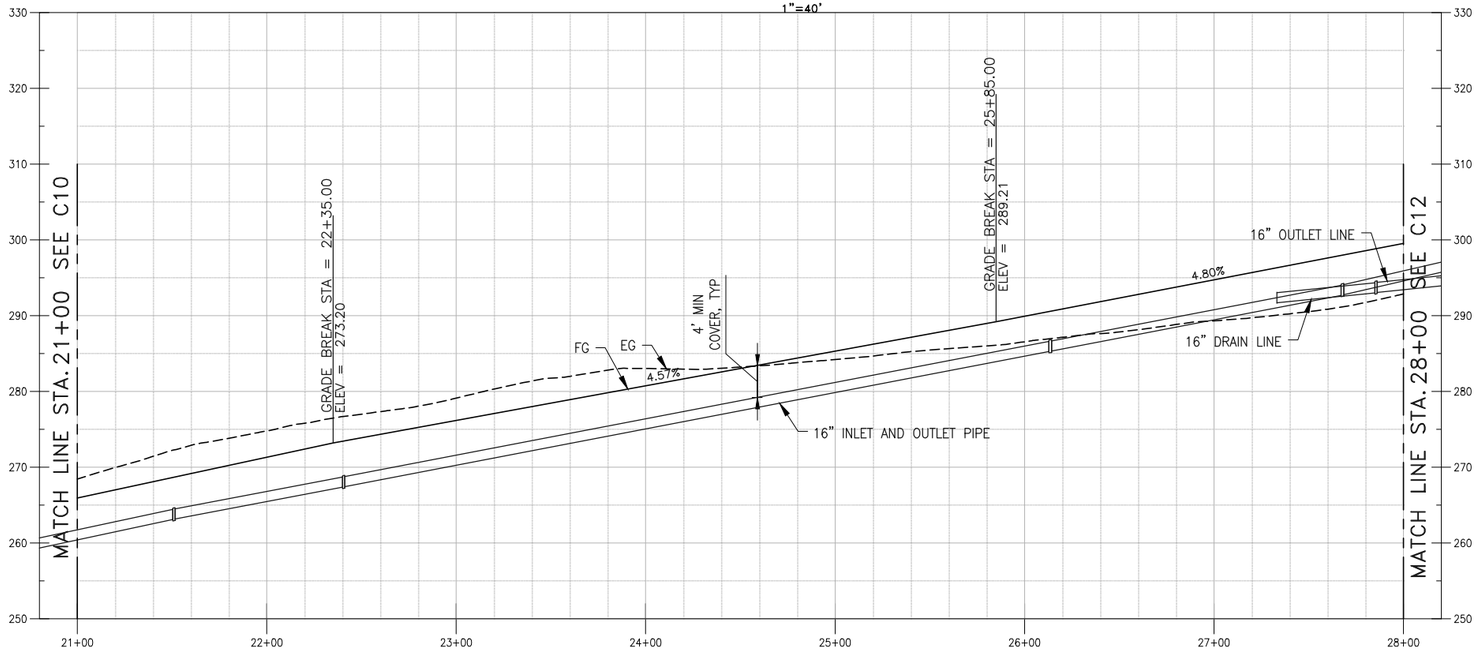

PROFILE

HORIZ 1"=40', VERT 1"=10'

0 10 20 30 VERT 1" = 10'

0 40 80 120 HORIZ 1" = 40'

REGISTERED PROFESSIONAL ENGINEER CRAIG JEFFERY SMITH No. 70883 Exp. 6-30-17 CIVIL STATE OF CALIFORNIA

REVISIONS

TRANSMISSION MAINS FOR MPWSP
CIVIL
TERMINAL RESERVOIR
TAMK ACCESS ROAD PLAN AND PROFILE-2

CALIFORNIA AMERICAN WATER

URS CORPORATION
1333 BROADWAY, SUITE 800
OAKLAND, CALIFORNIA 94612

AECOM

CALIFORNIA AMERICAN WATER

DRAWN BY R. YIP
PROJECT ENG'R D. DEVRIES
APPROVED C. SMITH

DATE SEPTEMBER 2015 **USE DIMENSIONS ONLY**
PROJECT 60424498 **SCALE** AS SHOWN

USE APPROVED DRAWINGS ONLY FOR CONSTRUCTION PURPOSES

5005C11

10005005C11

F:\Work\CAL-Am-MPWSP\Terminal-Reservoir\1 Sheets\5005C11.dwg Christina Somera Sep 16, 2015 - 9:59pm

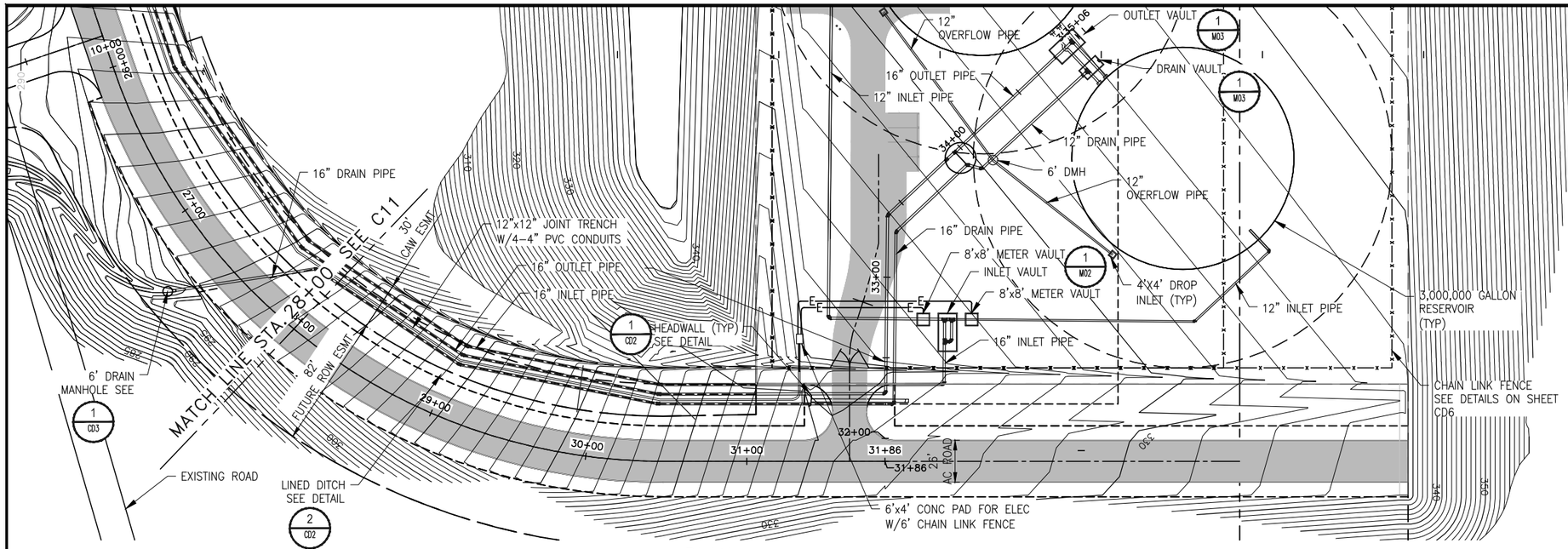

PLAN
1"=40'

NOTES:

1. THE STATIONING IS BASED ON THE CENTER LINE OF TANK ACCESS ROAD.
2. SCALE OF HORIZONTAL AND VERTICAL SHOWN ARE CHANGED FROM SCALE ON PLAN C09.
3. FOR CONTINUATION OF 12" x 12" JOINT TRENCH WITH 4-4" PVC CONDUITS. SEE ELECTRICAL DRAWINGS.

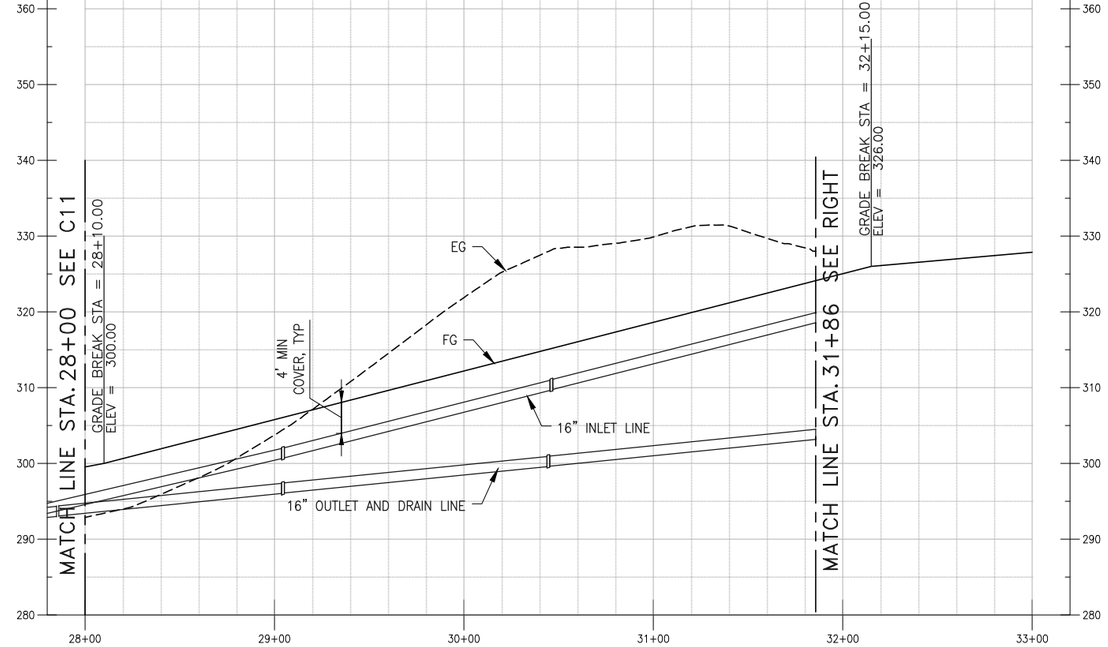

PROFILE
HORIZ 1"=40', VERT 1"=10'

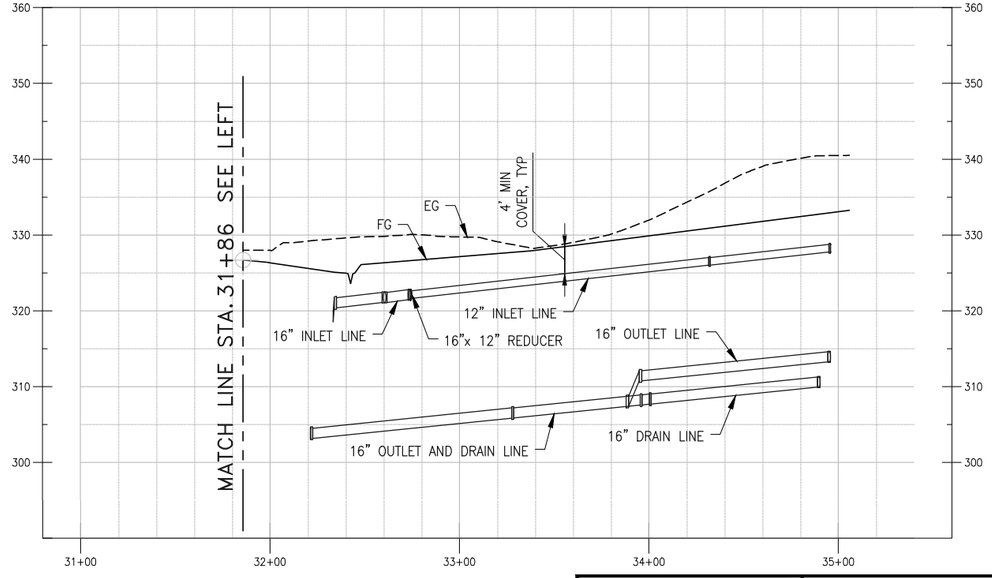

PROFILE
HORIZ 1"=40', VERT 1"=10'

0 10 20 30
VERT 1" = 10'

0 40 80 120
HORIZ 1" = 40'

REVISIONS

REGISTERED PROFESSIONAL ENGINEER
CRAIG JEFFERY SMITH
No. 70883
Exp. 6-30-17
CIVIL
STATE OF CALIFORNIA

TRANSMISSION MAINS FOR MPWSP
CIVIL
TERMINAL RESERVOIR
TANK ACCESS ROAD PLAN AND PROFILE-3

CALIFORNIA
AMERICAN WATER

URS CORPORATION
1333 BROADWAY, SUITE 800
OAKLAND, CALIFORNIA 94612

AECOM

CALIFORNIA AMERICAN WATER

DRAWN BY R. YIP
PROJECT ENG'R D. DEVRIES
APPROVED C. SMITH
DATE SEPTEMBER 2015
PROJECT 60424498
USE DIMENSIONS ONLY
SCALE AS SHOWN

USE APPROVED DRAWINGS ONLY FOR CONSTRUCTION PURPOSES

5005C12

10005005C12

F:\Work\CAL-Am-MPWSP\Terminal-Reservoir\1 Sheets\5005C12.dwg Christina Somera Sep 16, 2015 - 10:00pm

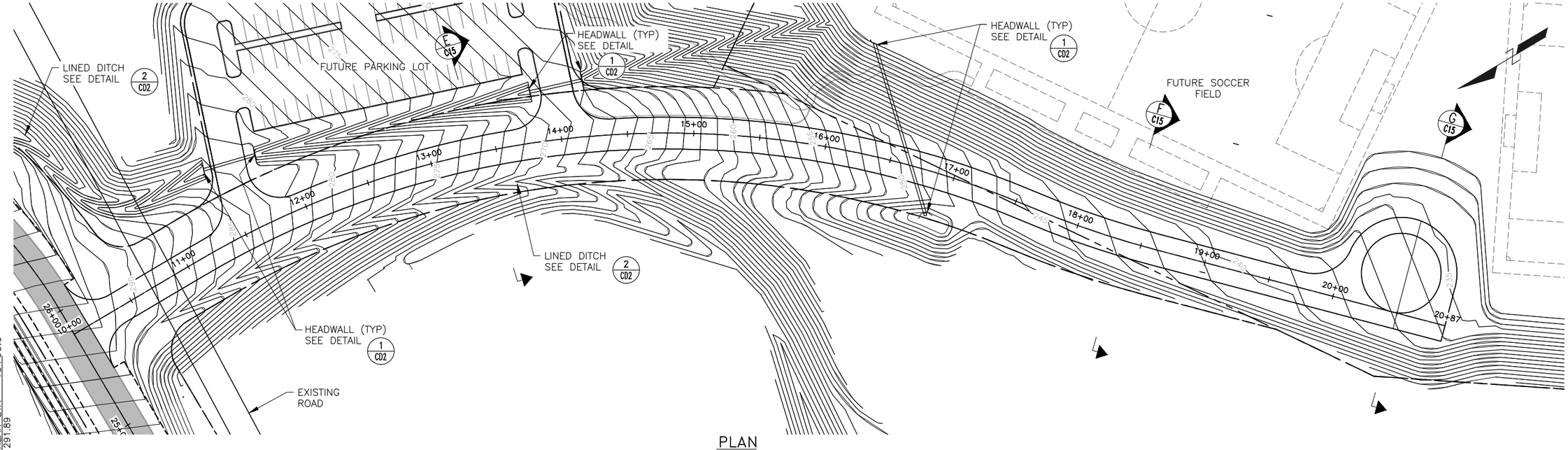

PLAN
1"=40'

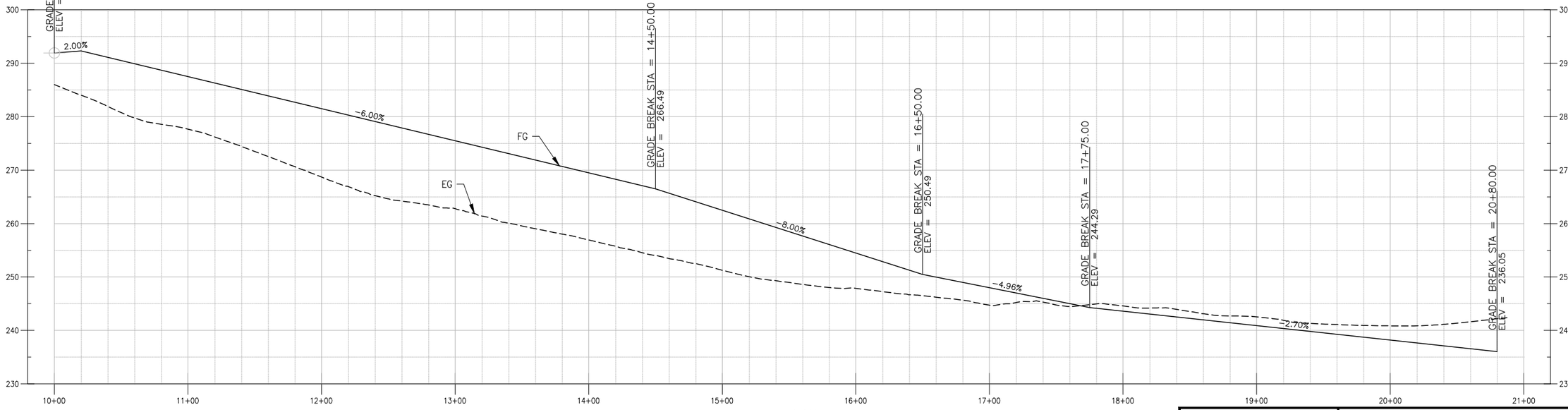

PROFILE
HORIZ 1"=40', VERT 1"=10'

0 10 20 30
VERT 1" = 10'

0 40 80 120
HORIZ 1" = 40'

REVISIONS

TRANSMISSION MAINS FOR MPWSP
CIVIL
TERMINAL RESERVOIR
SOCCER FIELD ACCESS ROAD PLAN AND PROFILE

CALIFORNIA
AMERICAN WATER

URS CORPORATION
1333 BROADWAY, SUITE 800
OAKLAND, CALIFORNIA 94612

AECOM

CALIFORNIA AMERICAN WATER

DRAWN BY R. YIP
PROJECT ENG'R D. DEVRIES
APPROVED C. SMITH

DATE SEPTEMBER 2015
PROJECT 60424498

USE DIMENSIONS ONLY
SCALE AS SHOWN

USE APPROVED DRAWINGS ONLY FOR CONSTRUCTION PURPOSES

5005C13

REGISTERED PROFESSIONAL ENGINEER
CRAIG JEFFERY SMITH
No. 70883
Exp. 6-30-17
CIVIL
STATE OF CALIFORNIA

F:\Work\CAL-Am-MPWSP\Terminal-Reservoir\1 Sheets\5005C13.dwg Christina Somera Sep 16, 2015 - 10:00pm

10005005C13

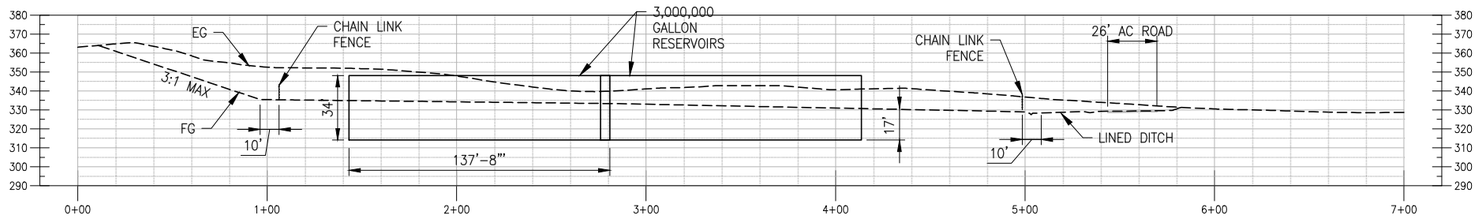

SECTION AT RESERVOIR A / C3
SCALE: 1"=40'

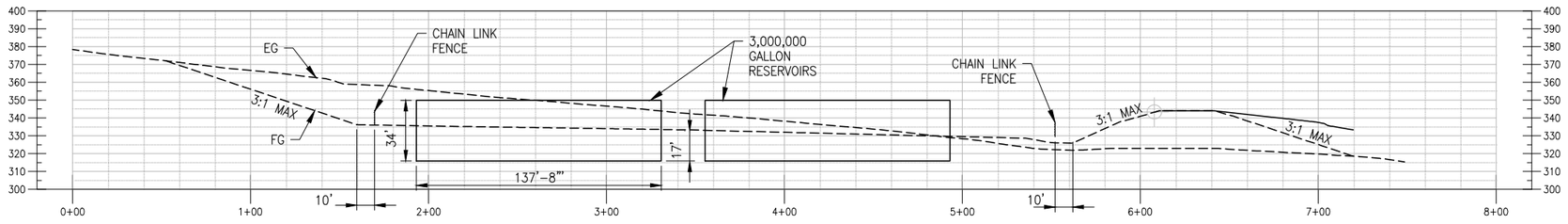

SECTION AT RESERVOIR B / C3
SCALE: 1"=40'

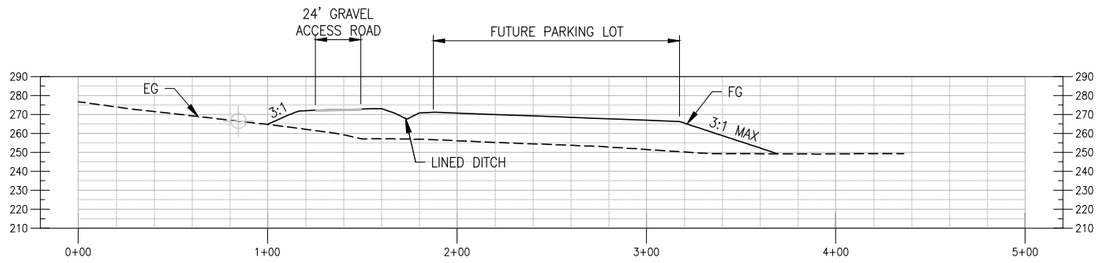

SECTION AT PARKING LOT C / C4
SCALE: 1"=40'

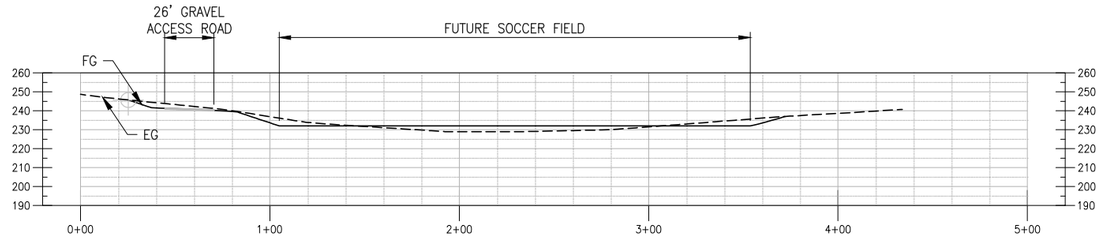

SECTION AT SOCCER FIELD D / C5
SCALE: 1"=40'

REVISIONS

REGISTERED PROFESSIONAL ENGINEER CRAIG JEFFERY SMITH No. 70883 Exp. 6-30-17 CIVIL STATE OF CALIFORNIA

TRANSMISSION MAINS FOR MPWSP
CIVIL
TERMINAL RESERVOIR
CROSS SECTION

CALIFORNIA
AMERICAN WATER

URS CORPORATION
1333 BROADWAY, SUITE 800
OAKLAND, CALIFORNIA 94612

AECOM

CALIFORNIA AMERICAN WATER

DRAWN BY R. YIP
PROJECT ENG'R D. DEVRIES
APPROVED C. SMITH

DATE SEPTEMBER 2015
PROJECT 60424498

USE DIMENSIONS ONLY
SCALE AS SHOWN

USE APPROVED DRAWINGS ONLY FOR CONSTRUCTION PURPOSES

5005C14

10005005C14

F:\Work\CAL-Am-MPWSP\Terminal-Reservoir\1_Sheets\5005C14.dwg Christina Somero Sep 16, 2015 - 10:00pm

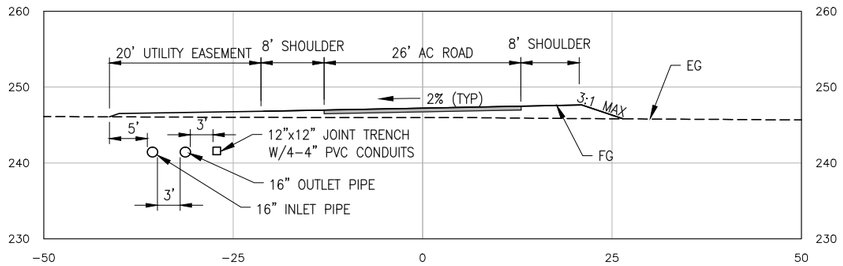

TANK ACCESS ROAD SECTION A C10
SCALE: 1"=10'

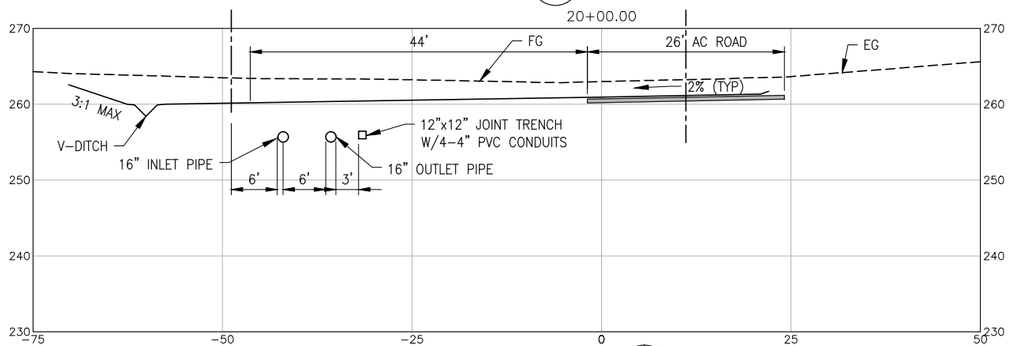

TANK ACCESS ROAD SECTION B C10
SCALE: 1"=10'

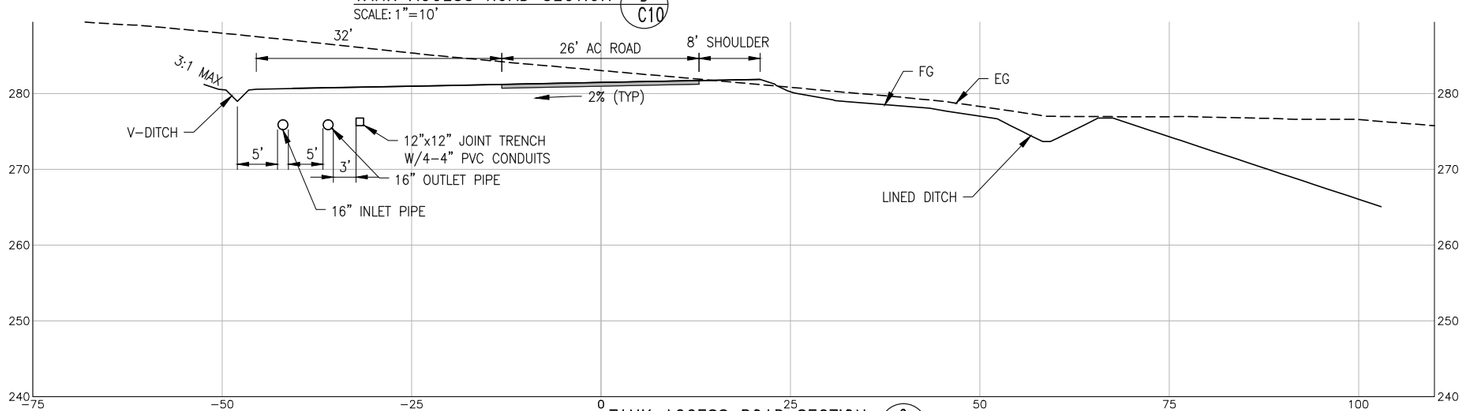

TANK ACCESS ROAD SECTION C C11
SCALE: 1"=10'

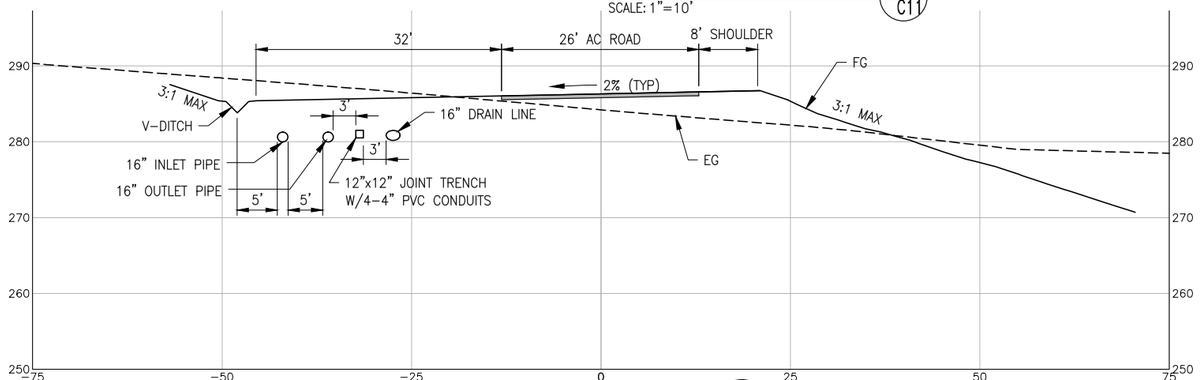

TANK ACCESS ROAD SECTION D C11
SCALE: 1"=10'

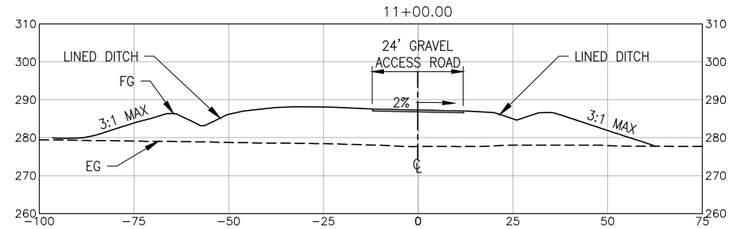

SOCCER FIELD ACCESS ROAD SECTION E C13
SCALE: 1"=20'

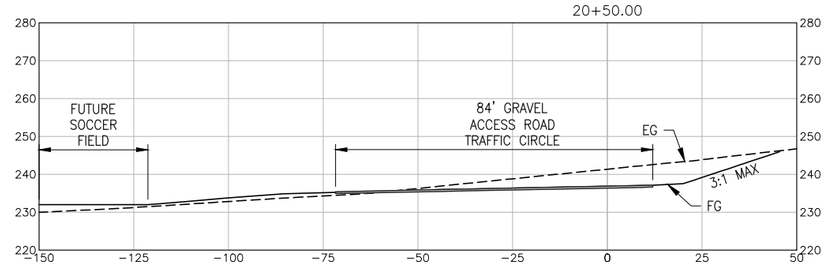

SOCCER FIELD ACCESS ROAD SECTION G C13
SCALE: 1"=20'

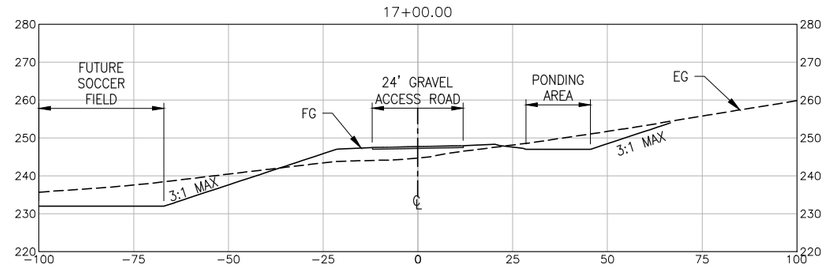

SOCCER FIELD ACCESS ROAD SECTION F C13
SCALE: 1"=20'

REVISIONS

REGISTERED PROFESSIONAL ENGINEER
CRAIG JEFFERY SMITH
No. 70883
Exp. 6-30-17
CIVIL
STATE OF CALIFORNIA

TRANSMISSION MAINS FOR MPWSP
CIVIL
TERMINAL RESERVOIR
ROAD CROSS SECTIONS

CALIFORNIA
AMERICAN WATER

URS CORPORATION
1333 BROADWAY, SUITE 800
OAKLAND, CALIFORNIA 94612

AECOM

CALIFORNIA AMERICAN WATER

DRAWN BY R. YIP
PROJECT ENG'R D. DEVRIES
APPROVED C. SMITH

DATE SEPTEMBER 2015
PROJECT 60424498

USE DIMENSIONS ONLY
SCALE AS SHOWN

USE APPROVED DRAWINGS ONLY
FOR CONSTRUCTION PURPOSES

5005C15

10005005C15

F:\Work\CAL-Am-MPWSP\Terminal-Reservoir\1 Sheets\5005C15.dwg Christina Somera Sep 16, 2015 - 10:01pm

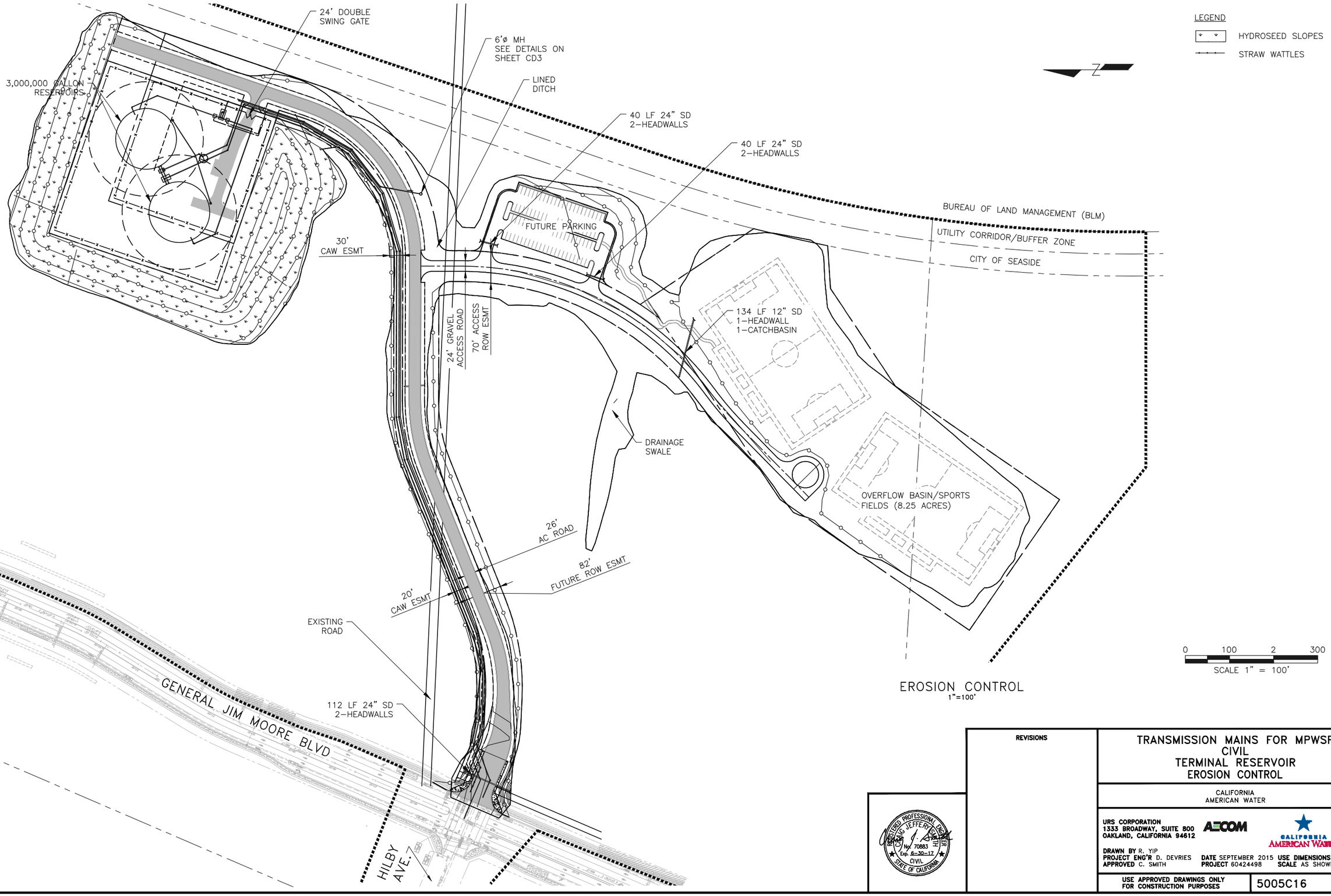

EROSION CONTROL
1"=100'

F:\Work\CAL-Am-MPWSP\Terminal-Reservoir\1 Sheets\5005C16.dwg Christina Somera Sep 16, 2015 - 10:02pm

REVISIONS	TRANSMISSION MAINS FOR MPWSP CIVIL TERMINAL RESERVOIR EROSION CONTROL
	CALIFORNIA AMERICAN WATER
	URS CORPORATION 1333 BROADWAY, SUITE 800 OAKLAND, CALIFORNIA 94612 AECOM CALIFORNIA AMERICAN WATER
	DRAWN BY R. YIP PROJECT ENG'R D. DEVRIES APPROVED C. SMITH DATE SEPTEMBER 2015 USE DIMENSIONS ONLY PROJECT 60424498 SCALE AS SHOWN
	USE APPROVED DRAWINGS ONLY FOR CONSTRUCTION PURPOSES 5005C16

CRAIG JEFFERY SMITH — No. 70883 — Exp. 6-30-17 — CIVIL — STATE OF CALIFORNIA — PROFESSIONAL ENGINEER

10005005C16

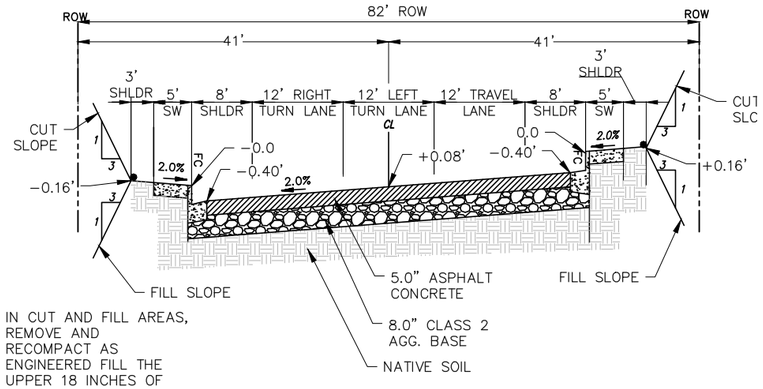

IN CUT AND FILL AREAS, REMOVE AND RECOMPACT AS ENGINEERED FILL THE UPPER 18 INCHES OF SOILS.

HILLBY AVENUE TYPICAL SECTION — 1

SCALE: NTS

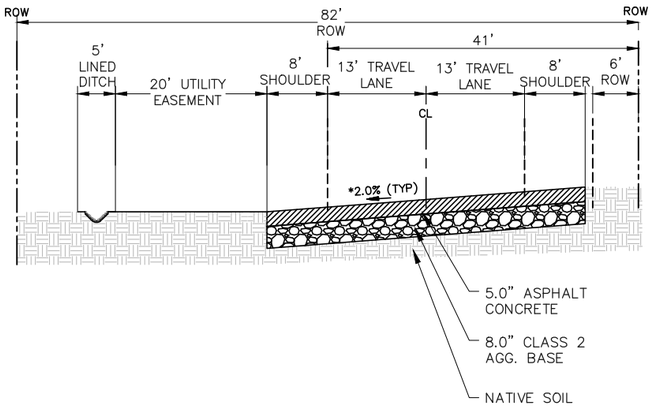

HILLBY AVENUE CONTINUATION TYPICAL SECTION — 2

SCALE: NTS

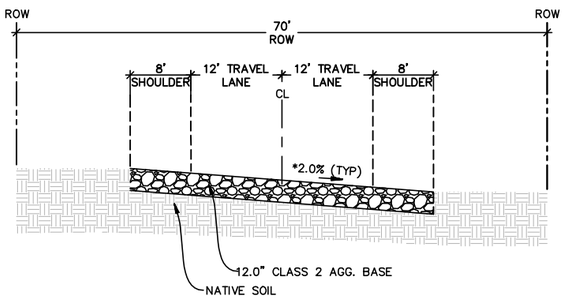

SOCCER ACCESS ROAD TYPICAL SECTION — 3

SCALE: NTS

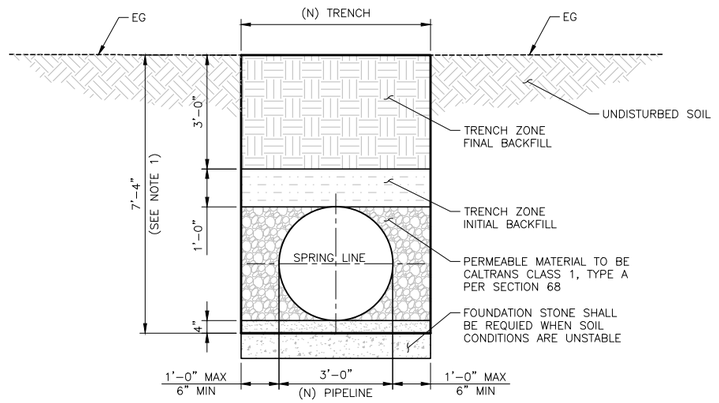

TYPICAL TRENCH BACKFILL — 4

SCALE: 1"=2'

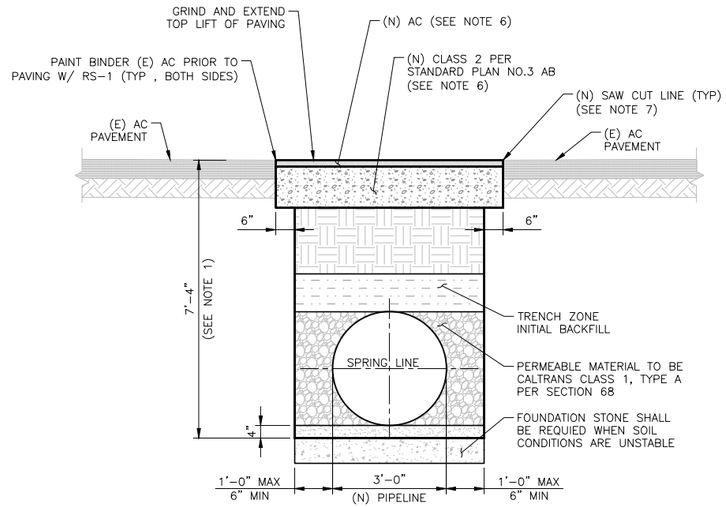

TYPICAL TRENCH BACKFILL AT ROADWAY — 5

SCALE: 1"=2'

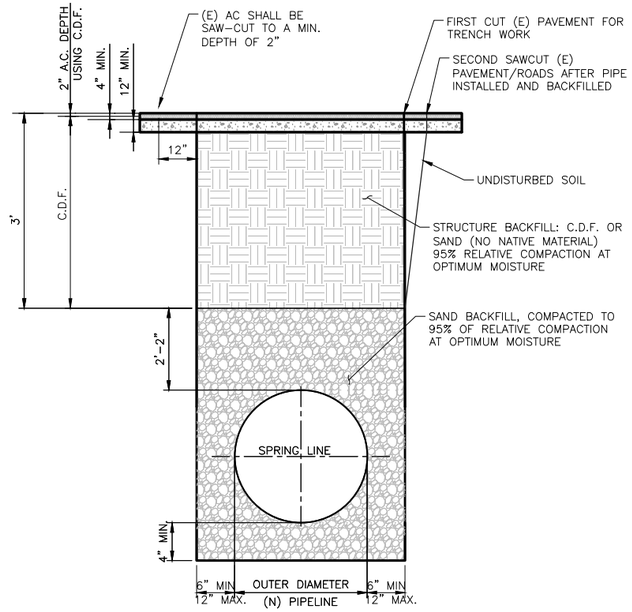

HILBY AVE, CITY OF SEASIDE – TRENCH BACKFILL DETAIL — 6

SCALE: NTS

NOTES:

1. FOR TRENCHES REQUIRING SHORING AND BRACING, DIMENSIONS SHALL BE TAKEN FROM THE INSIDE FACE OF SHORING AND BRACING.
2. NO ROCKS OR BOULDERS 2" OR LARGER TO BE USED IN THE INITIAL BACKFILL.
3. ALL BACKFILL MATERIAL SHALL BE SUITABLE NATIVE MATERIAL.
4. BACKFILL SHALL BE TAMPED IN 8" LIFTS FOR TRENCHES > 24" IN WIDTH. FOR TRENCHES <=24" WIDE, USE 18" LIFTS.
5. WHEN USING PVC OR ABS, PLACE 8" ABOVE TOP OF PIPE. COMPACT WITH VIBRATORY PLATE OR ROD VIBRATOR. CHECK PIPE INVERT PRIOR TO BACKFILLING ROCK OVER PIPE.
6. THE STRUCTURAL SECTION MUST MATCH THE EXISTING STRUCTURAL SECTION 19-4 OF THE CITY STANDARD SPECIFICATIONS. BACKFILL SHALL BE COMPACTED TO 95% RELATIVE COMPACTION.
7. CONCRETE STREET SECTIONS TO BE DOWELED 3' O.C. OR U.O.N. WITH 1/2" DOWELS.
8. FOR CONCRETE PAVEMENT MATCH (E) SCORE JOINTS OR EXPANSION JOINTS.
9. FOR CONCRETE PAVEMENT, USE 7-SAC MIX. NO TRAFFIC LOADS FOR 7 DAYS.
10. FOR BACKFILL MATERIALS AND COMPACTION METHODS SEE SECTION 19-4 OF THE CITY STANDARD SPECIFICATIONS. BACKFILL SHALL BE COMPACTED TO 95% RELATIVE COMPACTION.
11. ALL STREET CUTS SHALL BE NEATLY SAWCUT ON TRUE LINE TO 1-1/2" MIN. DEPTH.
12. TWO SACK CEMENT SLURRY BACKFILL SHALL BE USED AS BACKFILL IF TRENCH IS LESS THAN 18" WIDE OR IN PATCH AREAS LESS THAN 100 SQ-FT.
13. TRENCH WIDTH SHOWN ON PLANS FOR PAVEMENT RESTORATION MAY VARY FROM ACTUAL WIDTH REQUIRED TO PERFORM NECESSARY WORK DEPENDING UPON METHOD FOR TRENCH SHORING/PROTECTION USED BY CONTRACTOR.
14. ALL PAVEMENT MARKINGS AND RAISED PAVEMENT MARKERS OBLITERATED DURING CONSTRUCTION SHALL BE REPAINTED AND OR REPLACED BY THE CONTRACTOR.
15. IN CASE OF WATER OR SEWER REFER TO MCWD STANDARD PLANS EXCEPT FOR STREET RESTORATION.

REVISIONS

REGISTERED PROFESSIONAL ENGINEER CRAIG JEFFERY SMITH No. 70883 Exp. 6-30-17 CIVIL STATE OF CALIFORNIA

TRANSMISSION MAINS FOR MPWSP
CIVIL
TERMINAL RESERVOIR
DETAILS – 1 OF 3

CALIFORNIA AMERICAN WATER

URS CORPORATION
1333 BROADWAY, SUITE 800
OAKLAND, CALIFORNIA 94612

AECOM

CALIFORNIA AMERICAN WATER

DRAWN BY R. YIP
PROJECT ENG'R T. PENG
APPROVED C. SMITH

DATE SEPTEMBER 2015 USE DIMENSIONS ONLY
PROJECT 60424498 SCALE AS SHOWN

USE APPROVED DRAWINGS ONLY FOR CONSTRUCTION PURPOSES

5005CD01

10005005CD01

F:\Work\CAL-Am-MPWSP\Terminal-Reservoir\1 Sheets\5005CD01.dwg Christina Somera Sep 16, 2015 - 10:02pm

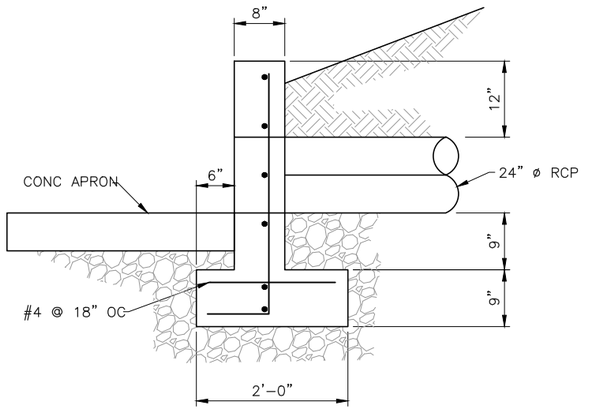

SECTION B

NOTES:

1. STEEL SPACING, AS SHOWN, IS MAXIMUM ALLOWABLE.
2. FILTER FABRIC, SHALL BE TYPE B NON-WOVEN PER CALTRANS SPECIFICATIONS, SECTION 88 TO BE PLACED PARALLEL TO DIRECTION OF FLOW AND OVERLAPPED PER MANUFACTURER'S RECOMMENDATION.

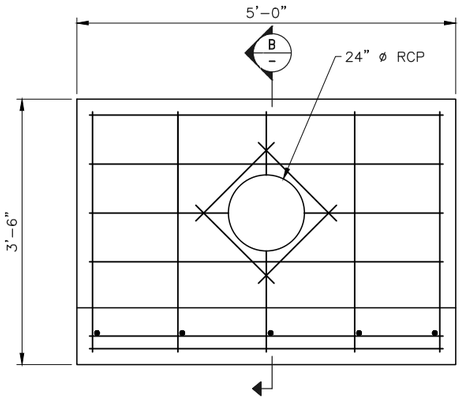

FRONT ELEVATION

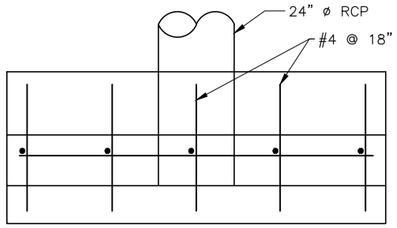

TYPE "A" HEADWALL 1
SCALE: NTS

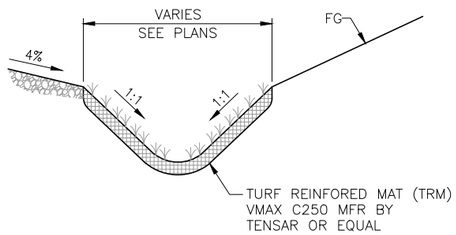

LINED DITCH 2
SCALE: 1"=1'-0"

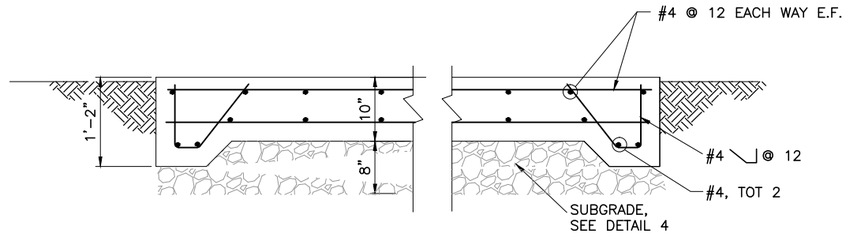

TYPICAL EQUIPMENT PAD

DETAIL 3
SCALE: NTS

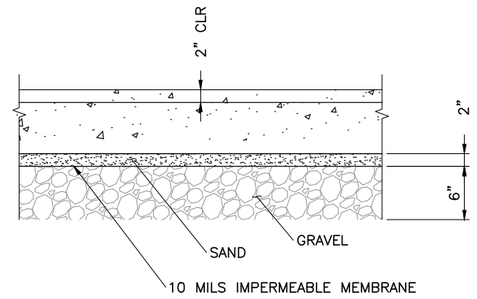

TYPICAL SUBGRADE FOR MAT FOUNDATION

DETAIL 4
SCALE: NTS

NOTES:

1. SLOPE PAD AWAY FROM CENTER ON ALL SIDES SO WATER DRAINS OFF EASILY.
2. PROVIDE 1-#4x4'-0" DIAGONAL TOP AND BOTTOM AT EACH PAD PENETRATION.

REVISIONS

REGISTERED PROFESSIONAL ENGINEER CRAIG JEFFERY SMITH No. 70883 Exp. 6-30-17 CIVIL STATE OF CALIFORNIA

TRANSMISSION MAINS FOR MPWSP
CIVIL
TERMINAL RESERVOIR
DETAILS - 2 OF 3

CALIFORNIA
AMERICAN WATER

URS CORPORATION
1333 BROADWAY, SUITE 800
OAKLAND, CALIFORNIA 94612

AECOM

CALIFORNIA AMERICAN WATER

DRAWN BY R. YIP
PROJECT ENG'R T. PENG
APPROVED C. SMITH

DATE SEPTEMBER 2015 USE DIMENSIONS ONLY
PROJECT 60424498 SCALE AS SHOWN

USE APPROVED DRAWINGS ONLY FOR CONSTRUCTION PURPOSES

5005CD02

10005005CD02

F:\Work\CAL-Am-MPWSP\Terminal-Reservoir\1 Sheets\5005CD02.dwg Christina Somera Sep 16, 2015 - 10:02am

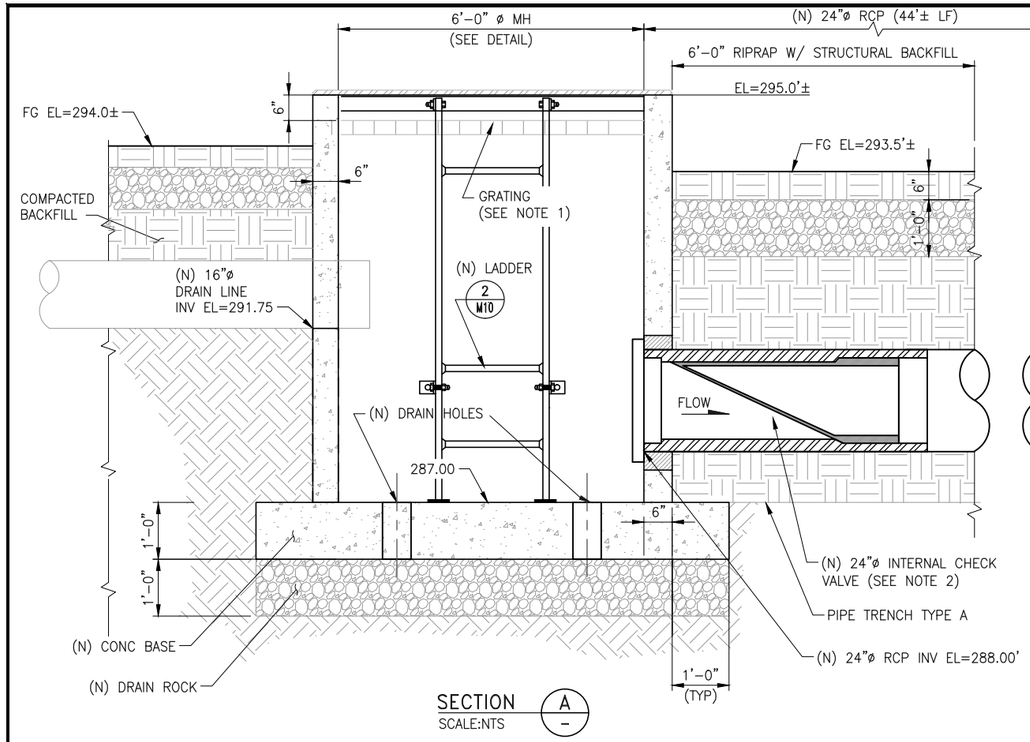

SECTION A
SCALE:NTS

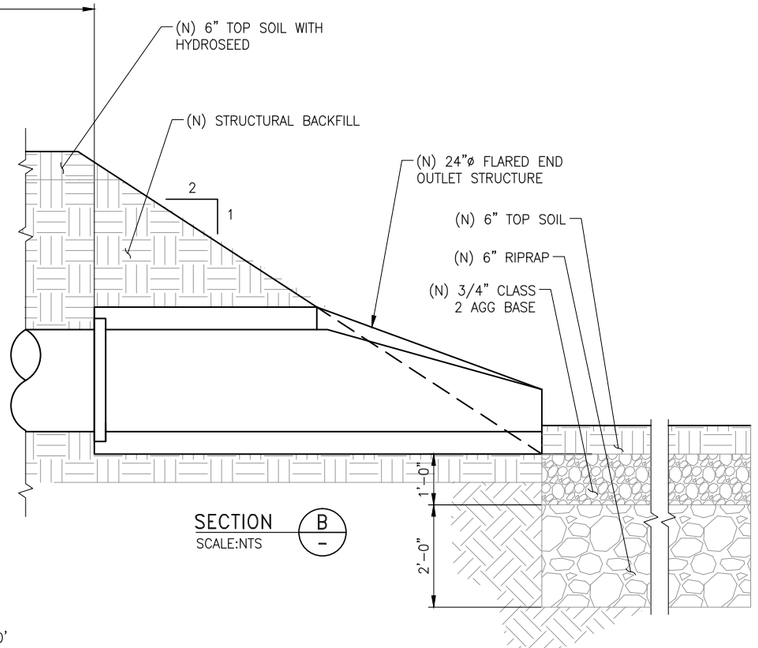

SECTION B
SCALE:NTS

NOTES:

1. INSTALL GRATING 6" BELOW (N) MH COVER 1 1/4"x3/16" TYPE W-19-14 SLIP RESISTANT GALVANIZED GRATING.
2. TIDEFLEX CHECKMATE INLINE VALVE – UPSTREAM FLANGED.
3. SEE M10 FOR MANHOLE COVER DETAILS AND LADDER DETAILS.

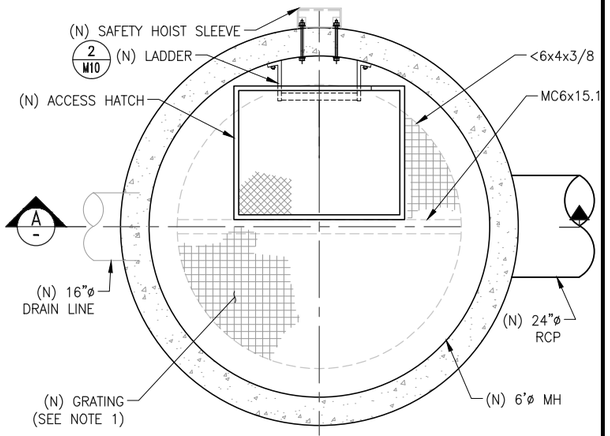

72"ø MANHOLE DETAIL 1
SCALE:NTS

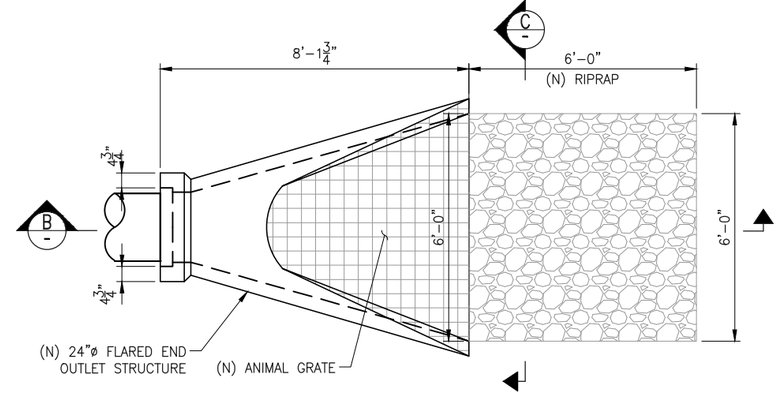

24"ø OUTLET STRUCTURE DETAIL 2
SCALE:NTS

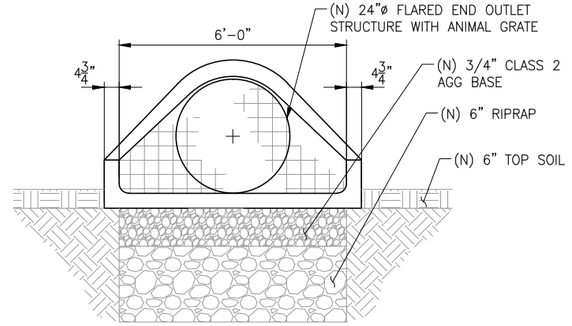

SECTION C
SCALE:NTS

REVISIONS

REGISTERED PROFESSIONAL ENGINEER
CRAIG JEFFERY SMITH
No. 70883
Exp. 6-30-17
CIVIL
STATE OF CALIFORNIA

TRANSMISSION MAINS FOR MPWSP
CIVIL
TERMINAL RESERVOIR
DETAILS – 3 OF 3

CALIFORNIA
AMERICAN WATER

URS CORPORATION
1333 BROADWAY, SUITE 800
OAKLAND, CALIFORNIA 94612

AECOM

CALIFORNIA AMERICAN WATER

DRAWN BY R. YIP
PROJECT ENG'R T. PENG
APPROVED C. SMITH

DATE SEPTEMBER 2015 USE DIMENSIONS ONLY
PROJECT 60424498 SCALE AS SHOWN

USE APPROVED DRAWINGS ONLY FOR CONSTRUCTION PURPOSES

5005CD03

10005005CD03

F:\Work\CAl-Am-MPWSP\Terminal-Reservoir\1 Sheets\5005CD03.dwg Christina Somera Sep 16, 2015 - 10:02pm

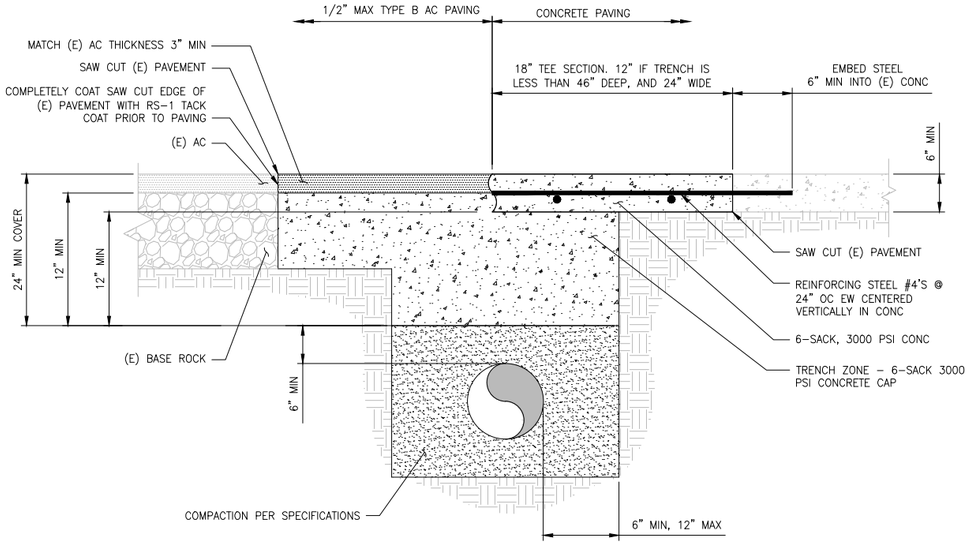

CONCRETE CAP FOR PIPE INSTALLED AT SUB-STANDARD DEPTH (1/-)
SCALE: NTS

NOTES:

1. IF ANY PORTION OF (E) PAVEMENT WITHIN SAWCUT LIMITS IS CONCRETE AT THE SURFACE, ENTIRE TRENCH SHALL BE RE-PAVED WITH CONCRETE AS SHOWN.
2. FOR UNPAVED AREAS, INSTALL 6-IN NATIVE TOP SOIL OVER CONCRETE CAP.
3. INSTALL CONCRETE CAP WHERE PIPE IS SMALLER THAN 36-IN WHERE COVE IS LESS THAN 36-IN.

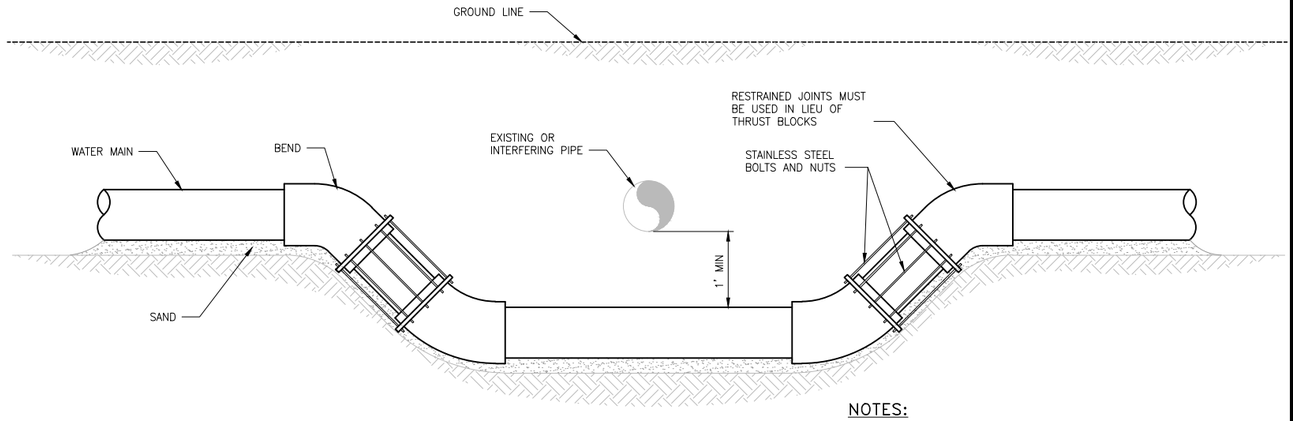

UNDER CROSSING DETAIL (2/-)
SCALE: NTS

NOTES:

1. ALL MATERIAL SHALL BE DUCTILE IRON.
2. RESTRAINED JOINT PIPE SHALL BE USED INSTEAD OF THRUST BLOCKS.
3. WATER MAIN OFFSET MAY BE ACCOMPLISHED USING ALLOWABLE DEFLECTION AT PIPE JOINTS.

REGISTERED PROFESSIONAL ENGINEER — CRAIG JEFFERY SMITH — No. 70883 — Exp. 6-30-17 — CIVIL — STATE OF CALIFORNIA

REVISIONS

TRANSMISSION MAINS FOR MPWSP
CIVIL
TERMINAL RESERVOIR
TYPICAL PIPE DETAILS

CALIFORNIA
AMERICAN WATER

AECOM
1333 BROADWAY, SUITE 800
OAKLAND, CALIFORNIA 94612

DRAWN BY V.DESHMUKH
PROJECT ENG'R T. PENG
APPROVED C. SMITH

DATE SEPTEMBER 2015 USE DIMENSIONS ONLY
PROJECT 60424498 SCALE AS SHOWN

USE APPROVED DRAWINGS ONLY FOR CONSTRUCTION PURPOSES

5005CD04

10005005CD04

F:\Work\CAL-Am-MPWSP\Terminal-Reservoir\1 Sheets\5005CD04.dwg Christina Somera Sep 16, 2015 - 10:03am

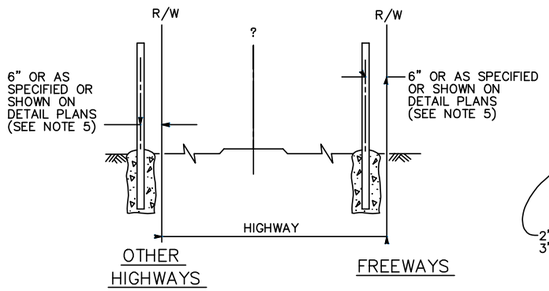

FENCE LOCATION

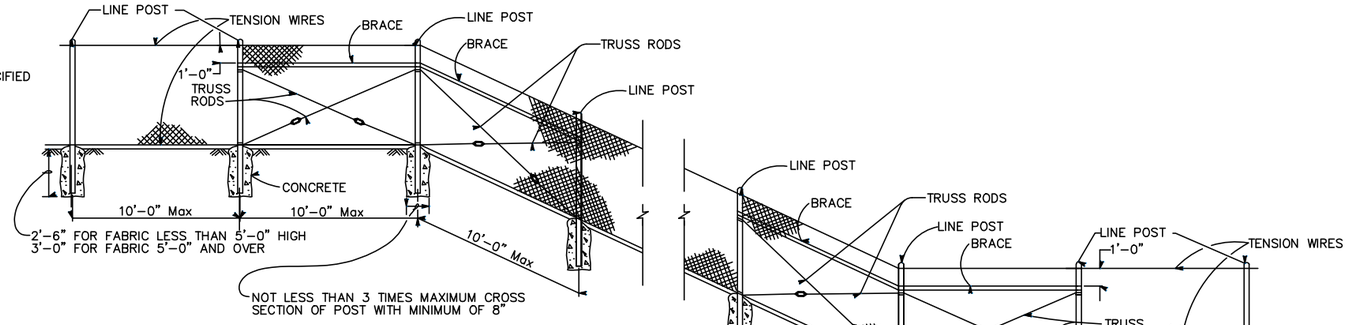

CHAIN LINK FENCE ON SHARP BREAK IN GRADE

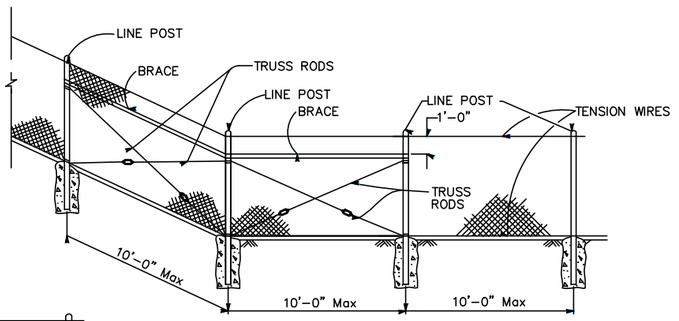

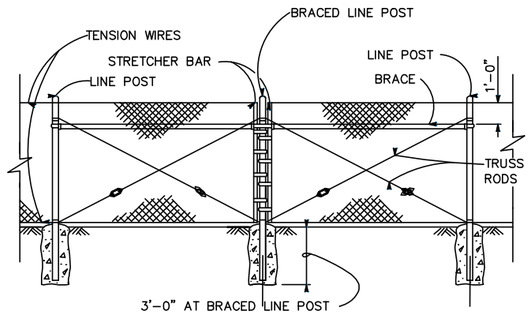

BRACED LINE POST INSTALLATION

Braced line post at intervals not exceeding 1000'

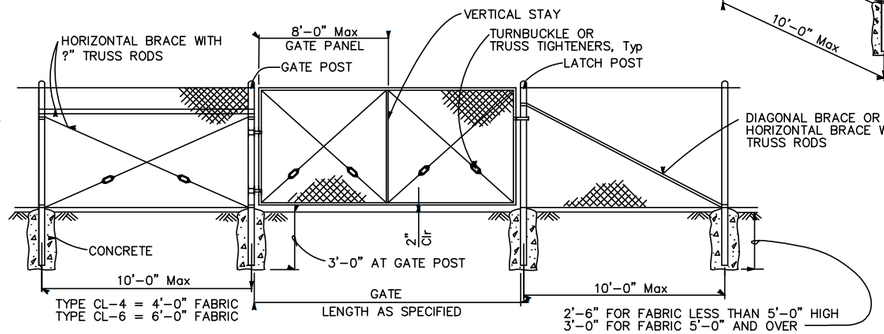

CHAIN LINK GATE INSTALLATION

NOTES:

1. The table below shows minimum sized posts and braces complying with the specifications. Larger or heavier post and brace sizes may be used upon approval.
2. Sections shown in the tables must also comply with the strength requirements and other provisions of the Specifications.
3. Other sections which comply with the strength requirements and other provisions of the Specifications may be used upon approval.
4. Options exercised shall be uniform on any one project.
5. Offset to be 2'-0" at monument locations, measured at right angles to R/W lines. Taper to achieve offset to be at least 20'-0" long.
6. See Revised Standard Plan RSP A85B for Brace, Stretcher Bar, and Truss Tightener Details.

GATE POST			
FENCE HEIGHT	GATE WIDTHS	ROUND OD PIPE	WEIGHT (lb/ft)
6'-0" AND LESS	UP THRU 6'-0"	2.875"	5.80
	OVER 6'-0" THRU 12'-0"	4.500"	10.80
	OVER 12'-0" THRU 18'-0"	5.563"	14.63
	OVER 18'-0" TO 24'-0" Max	6.625"	18.99
OVER 6'-0" TO 8'-0" Max	UP THRU 6'-0"	3.500"	7.58
	OVER 6'-0" THRU 12'-0"	5.563"	14.63
	OVER 12'-0" THRU 18'-0"	6.625"	18.99
	OVER 18'-0" TO 24'-0" Max	8.625"	28.58

Above post dimensions and weights are minimums.
Larger sizes may be used upon approval.

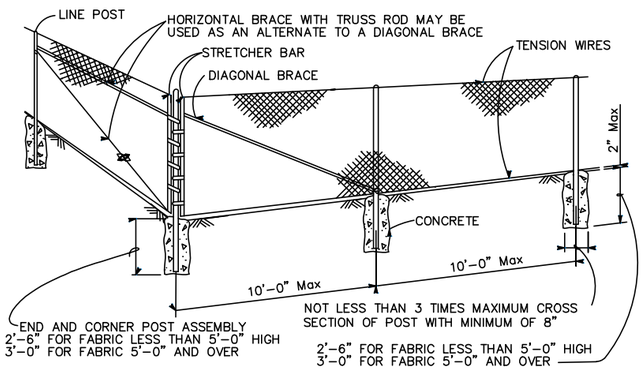

CORNER POST

TYPICAL MEMBER DIMENSIONS (See Notes)										
FENCE HEIGHT	LINE POSTS				END, LATCH AND CORNER POSTS		BRACES			
	ROUND OD PIPE	WEIGHT (lb/ft)	ROLL FORMED SECTION	ROLL FORMED WEIGHT (lb/ft)	ROUND OD PIPE	WEIGHT (lb/ft)	ROUND OD PIPE	WEIGHT (lb/ft)	ROLL FORMED SECTION	ROLL FORMED WEIGHT (lb/ft)
6'-0" AND LESS	1.900"	2.72	1.875" x 1.625"	1.85	2.375"	3.65	1.66"	2.27	1.625" x 1.25"	1.35
OVER 6'-0" TO 8'-0" Max	2.375"	3.65	2.25" x 1.70"	2.78	2.875"	5.80	1.66"	2.27	1.625" x 1.25"	1.35

RSP A85 DATED JULY 18, 2014 SUPERSEDES STANDARD PLAN A85
DATED MAY 20, 2011 – PAGE 112 OF THE STANDARD PLANS BOOK DATED 2010.

REVISED STANDARD PLAN RSP A85

STATE OF CALIFORNIA
DEPARTMENT OF TRANSPORTATION

CHAIN LINK FENCE

NO SCALE

2010 REVISED STANDARD PLAN RSP A85

REVISIONS

PROFESSIONAL ENGINEER CRAIG JEFFERY SMITH No. 70883 Exp. 6-30-17 CIVIL STATE OF CALIFORNIA

TRANSMISSION MAINS FOR MPWSP
CIVIL
TERMINAL RESERVOIR
CHAIN LINK FENCE DETAILS

CALIFORNIA
AMERICAN WATER

URS CORPORATION
1333 BROADWAY, SUITE 800
OAKLAND, CALIFORNIA 94612

AECOM

CALIFORNIA AMERICAN WATER

DRAWN BY R. YIP
PROJECT ENG'R T. PENG
APPROVED C. SMITH

DATE SEPTEMBER 2015 USE DIMENSIONS ONLY
PROJECT 60424498 SCALE AS SHOWN

USE APPROVED DRAWINGS ONLY FOR CONSTRUCTION PURPOSES

5005CD05

10005005CD05

F:\Work\CAL-Am-MPWSP\Terminal-Reservoir\1 Sheets\5005CD05.dwg Christina Somerg Sep 16, 2015 - 10:03am

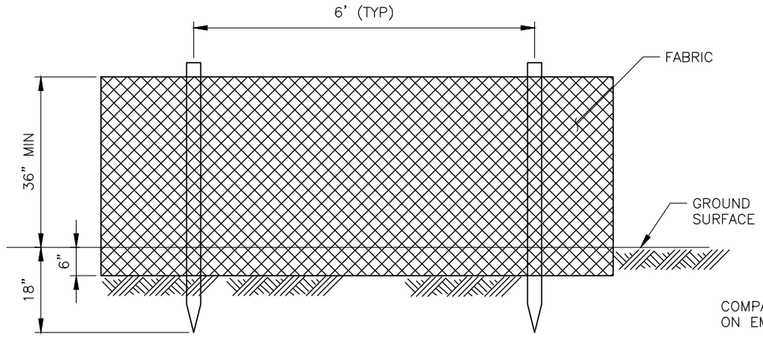

FENCE ELEVATION

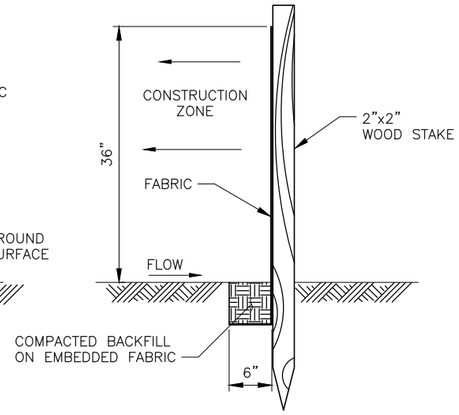

FENCE SECTION

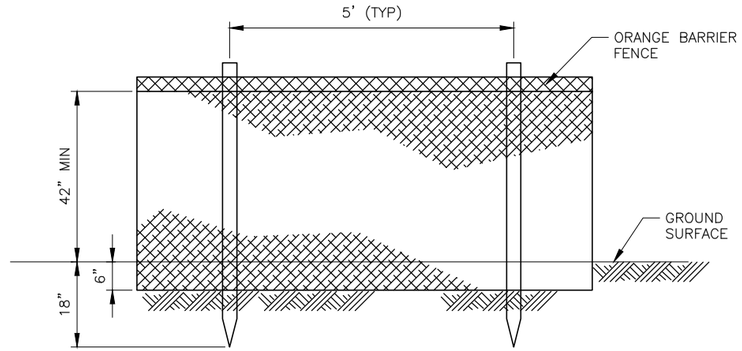

FENCE ELEVATION

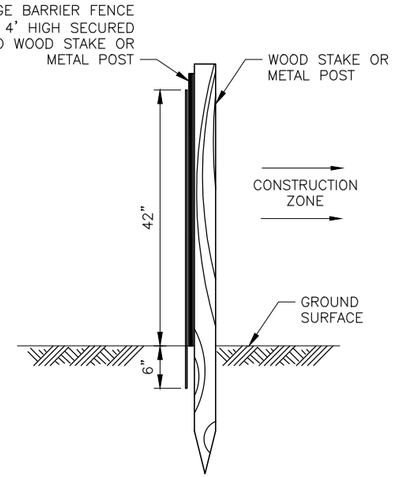

FENCE SECTION

ORANGE BARRIER FENCE DETAIL 2
SCALE: NTS

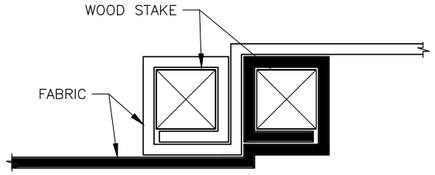

JOINT SECTION (TOP VIEW)

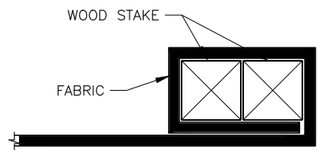

END SECTION (TOP VIEW)

SILT FENCE DETAIL 1
SCALE: NTS

NOTES

1. STAKES TO OVERLAP & FENCE FABRIC TO FOLD AROUND EACH STAKE ONE FULL TURN. SECURE FABRIC TO STAKE WITH 4 STAPLES.
2. STAKES SHALL BE DRIVEN TIGHTLY TOGETHER TO PREVENT POTENTIAL FLOW THROUGH OF SEDIMENT AT JOINT. THE TOPS OF THE STAKES SHALL BE SECURED WITH WIRE.
3. FOR END STAKE, FENCE SHALL BE FOLDED AROUND TWO STAKES ONE FULL TURN & SECURED WITH 4 STAPLES.
4. STAKE DIMENSIONS ARE NOMINAL.
5. CONTRACTOR SHALL PLACE SILT FENCE AND ORANGE BARRIER FENCE ALONG PERIMETER OF LIMITS OF WORK AS SHOWN IN THESE DRAWINGS AND IN ACCORDANCE WITH THE SPECIFICATIONS.
6. PLACE ORANGE BARRIER FENCE AT DRIP LINE OF ALL TREES WITHIN LIMITS OF WORK.
7. PLACE ORANGE BARRIER FENCE AROUND SPECIAL PLANT COMMUNITIES PER SPEC SECTION 01062.

REGISTERED PROFESSIONAL ENGINEER
CRAIG JEFFERY SMITH
No. 70883
Exp. 6-30-17
CIVIL
STATE OF CALIFORNIA

REVISIONS

TRANSMISSION MAINS FOR MPWSP
CIVIL
TERMINAL RESERVOIR
EXCLUSION FENCE DETAILS

CALIFORNIA
AMERICAN WATER

AECOM
1333 BROADWAY, SUITE 800
OAKLAND, CALIFORNIA 94612

DRAWN BY C. SOMERA
PROJECT ENG'R T. PENG
APPROVED C. SMITH

DATE SEPTEMBER 2015 USE DIMENSIONS ONLY
PROJECT 60424498 SCALE AS SHOWN

USE APPROVED DRAWINGS ONLY FOR CONSTRUCTION PURPOSES

5005CD06

F:\Work\CAL-Am-MPWSP\Terminal-Reservoir\1 Sheets\5005CD06.dwg Christina Somera Sep 16, 2015 - 10:03am

10005005CD06

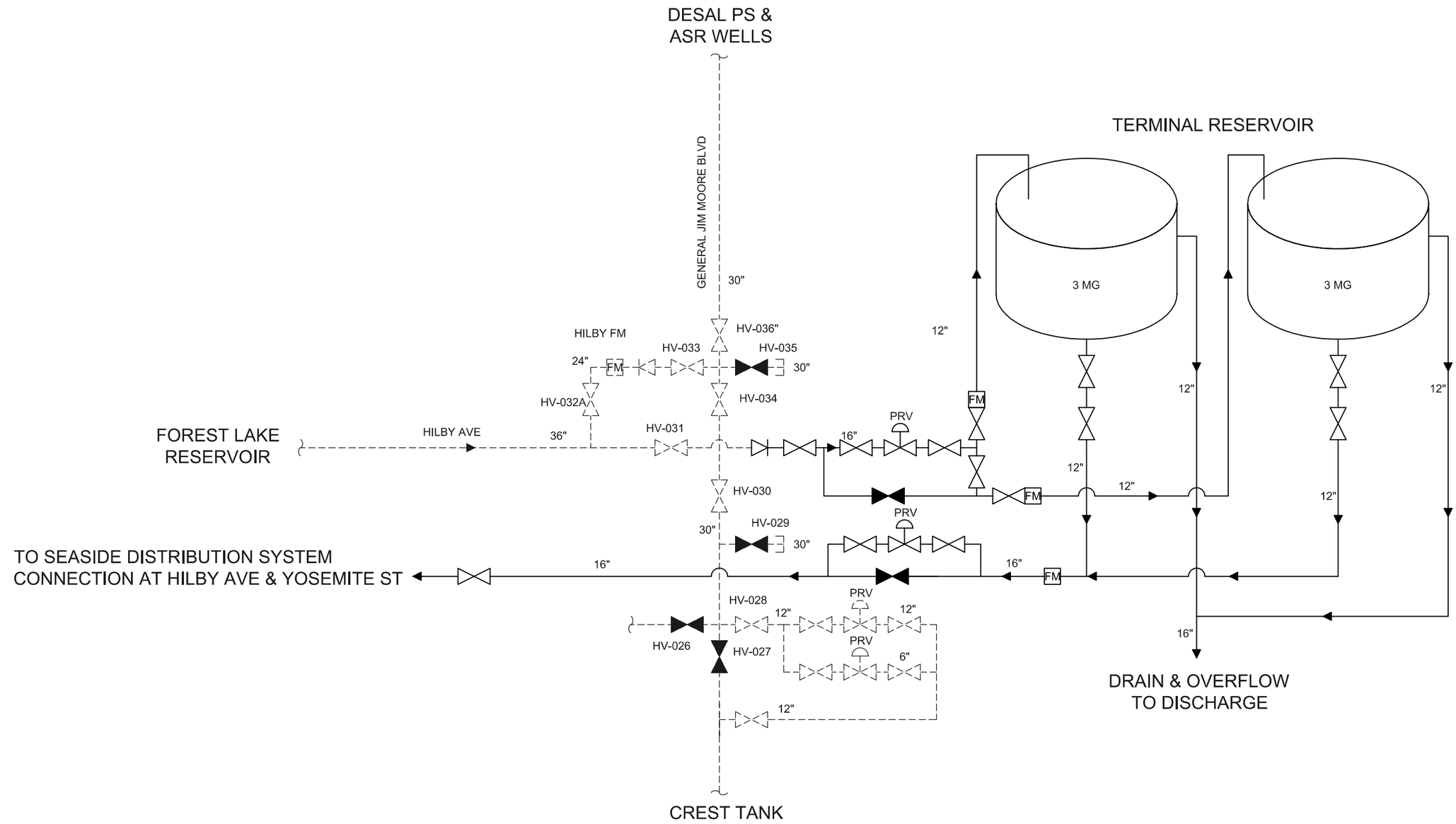

SCHEMATIC
SCALE: NTS

REVISIONS

REGISTERED PROFESSIONAL ENGINEER
CRAIG JEFFERY SMITH
No. 70883
Exp. 6-30-17
CIVIL
STATE OF CALIFORNIA

TRANSMISSION MAINS FOR MPWSP
MECHANICAL
TERMINAL RESERVOIR
TERMINAL RESERVOIR SCHEMATIC

CALIFORNIA
AMERICAN WATER

AECOM
1333 BROADWAY, SUITE 800
OAKLAND, CALIFORNIA 94612

AECOM
CALIFORNIA AMERICAN WATER

DRAWN BY C. SOMERA
PROJECT ENG'R T. PENG
APPROVED C. SMITH

DATE SEPTEMBER 2015
PROJECT 60424498

USE DIMENSIONS ONLY
SCALE AS SHOWN

USE APPROVED DRAWINGS ONLY
FOR CONSTRUCTION PURPOSES

5005M01

10005005M01

F:\Work\CAL-Am-MPWSP\Terminal-Reservoir\1 Sheets\5005M01.dwg Christina Somera Sep 16, 2015 - 10:03pm

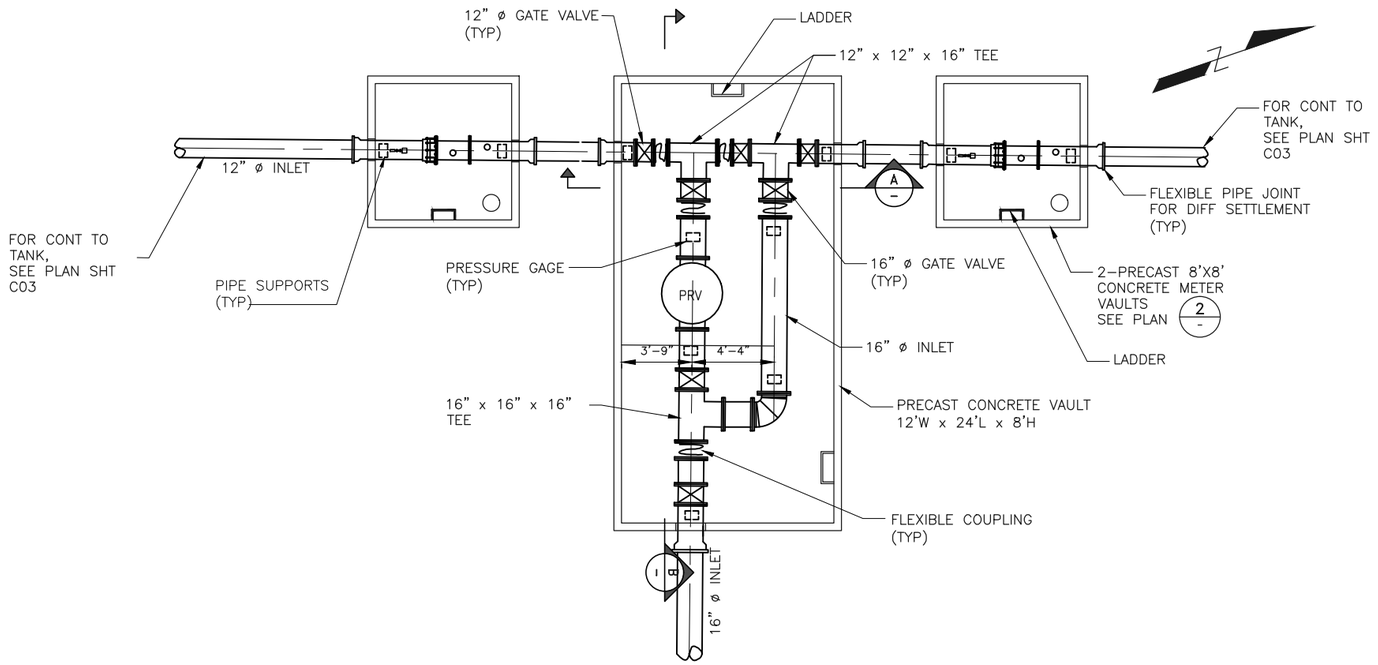

INLET VAULT AND METER VAULTS

DETAIL 1
SCALE: 1/4"=1'-0"

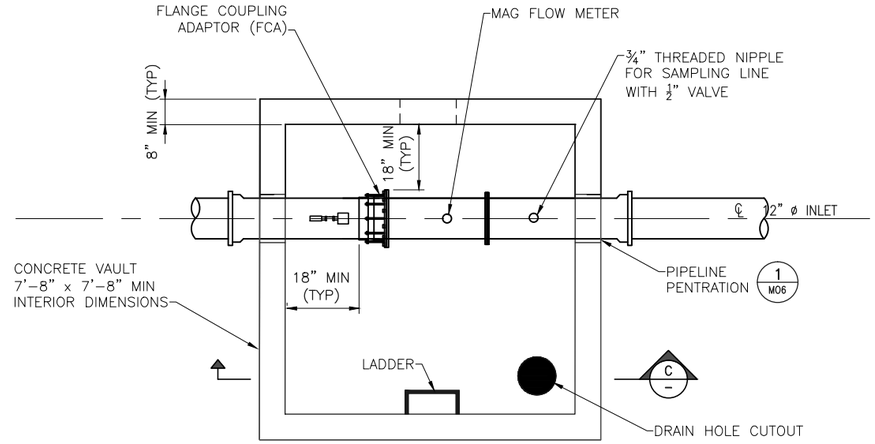

FLOW METER VAULT PLAN 2
SCALE: 1/2"=1'-0"

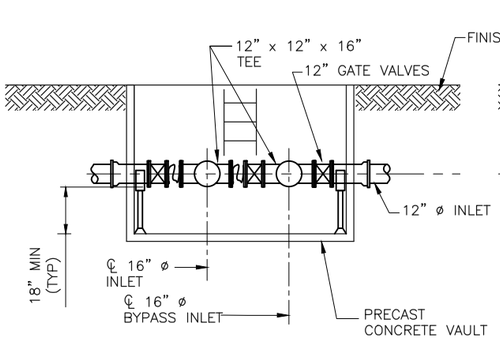

SECTION A
SCALE: 1/4"=1'-0"

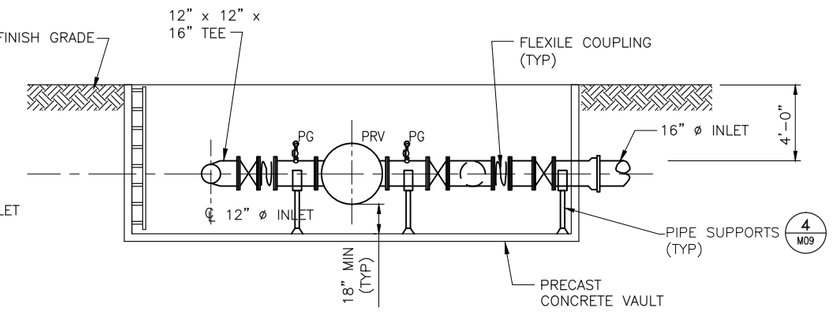

SECTION B
SCALE: 1/4"=1'-0"

SECTION C
SCALE: 1/2"=1'-0"

REVISIONS

REGISTERED PROFESSIONAL ENGINEER CRAIG JEFFERS HILL No. 70883 Exp. 6-30-17 CIVIL STATE OF CALIFORNIA

TRANSMISSION MAINS FOR MPWSP MECHANICAL TERMINAL RESERVOIR INLET VALVE VAULT

CALIFORNIA AMERICAN WATER

AECOM
1333 BROADWAY, SUITE 800
OAKLAND, CALIFORNIA 94612

DRAWN BY C. SOMERA
PROJECT ENG'R T. PENG
APPROVED C. SMITH
DATE SEPTEMBER 2015 USE DIMENSIONS ONLY
PROJECT 60424498 SCALE AS SHOWN

USE APPROVED DRAWINGS ONLY FOR CONSTRUCTION PURPOSES

5005M02

10005005M02

F:\Work\CAL-Am-MPWSP\Terminal-Reservoir\1 Sheets\5005M02.dwg Christina Somera Sep 16, 2015 - 10:03pm

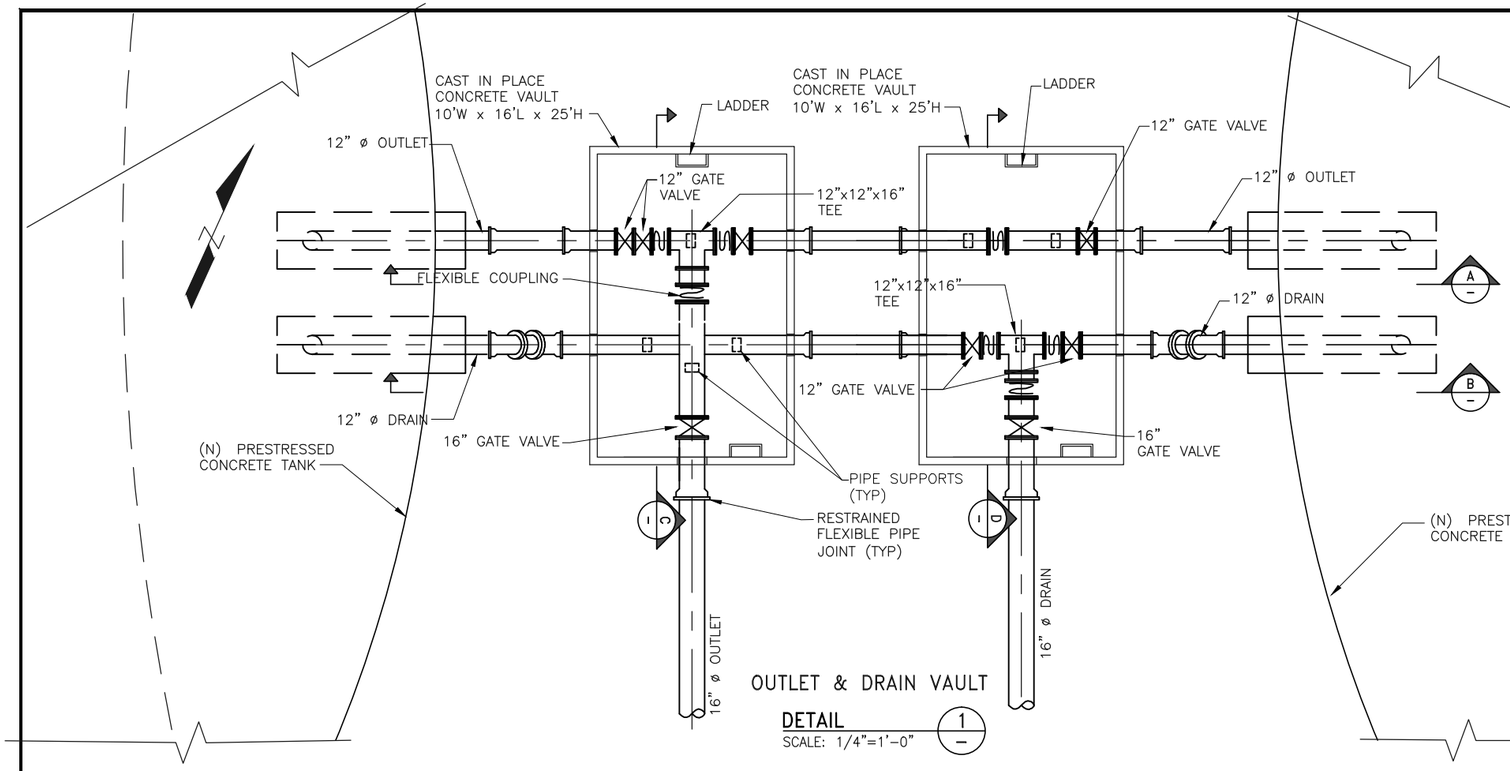

OUTLET & DRAIN VAULT

DETAIL 1

SCALE: 1/4"=1'-0"

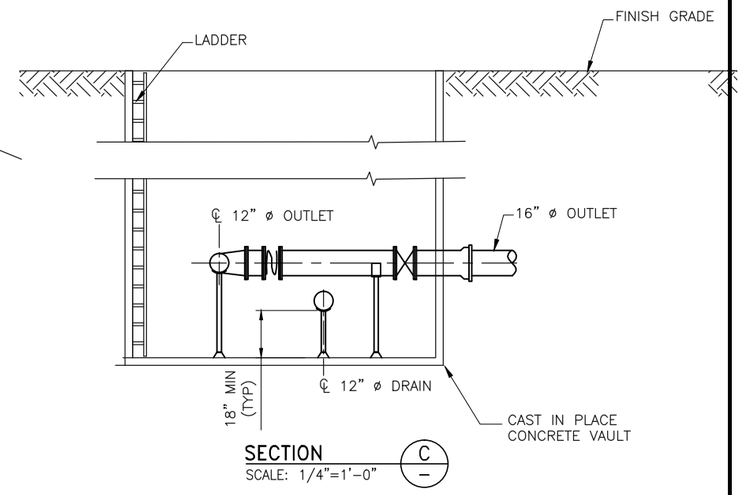

SECTION C

SCALE: 1/4"=1'-0"

(N) PRESTRESSED CONCRETE TANK

61' ø MAINTENANCE ACCESS AROUND EACH EXISTING TANK

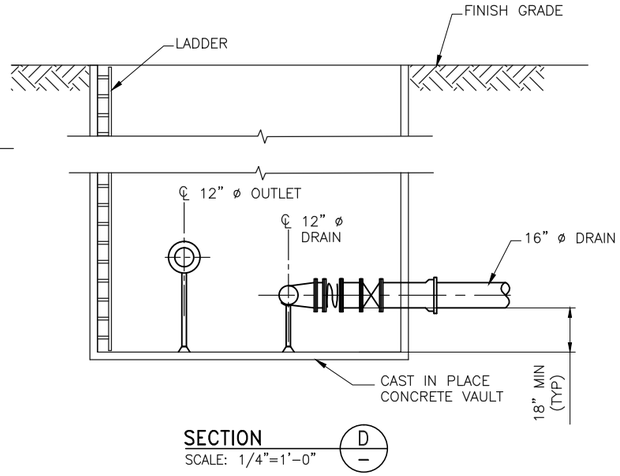

SECTION D

SCALE: 1/4"=1'-0"

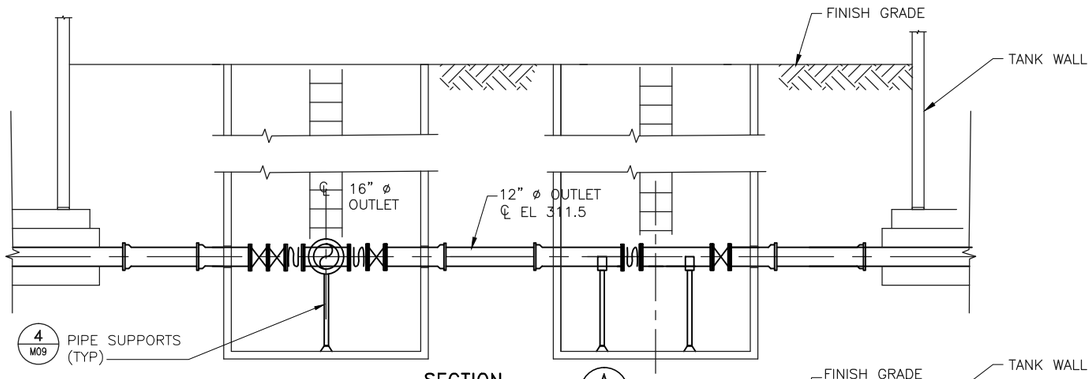

SECTION A

SCALE: 1/4"=1'-0"

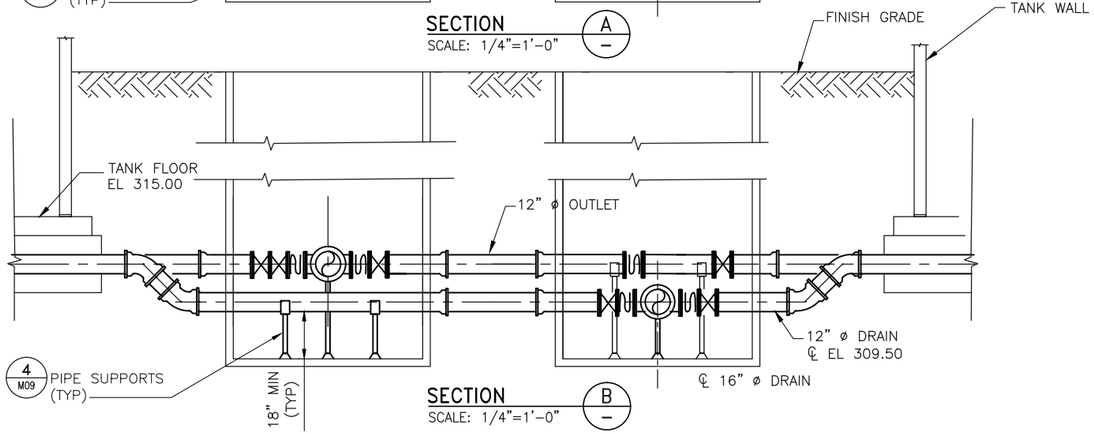

SECTION B

SCALE: 1/4"=1'-0"

REVISIONS

REGISTERED PROFESSIONAL ENGINEER CRAIG JEFFERY SMITH No. 70883 Exp. 6-30-17 CIVIL STATE OF CALIFORNIA

TRANSMISSION MAINS FOR MPWSP MECHANICAL TERMINAL RESERVOIR OUTLET AND DRAIN VALVE VAULTS

CALIFORNIA AMERICAN WATER

AECOM
1333 BROADWAY, SUITE 800
OAKLAND, CALIFORNIA 94612

DRAWN BY M. MONTES
PROJECT ENG'R T. PENG
APPROVED C. SMITH

DATE SEPTEMBER 2015 USE DIMENSIONS ONLY
PROJECT 60424498 SCALE AS SHOWN

USE APPROVED DRAWINGS ONLY FOR CONSTRUCTION PURPOSES

5005M03

10005005M03

F:\Work\CAL-Am-MPWSP\Terminal-Reservoir\1 Sheets\5005M03.dwg Christina Somera Sep 16, 2015 - 10:04pm

VALVE NOTES:

1. ALL EXTERNAL BOLTS AND NUTS ON VALVES SHALL BE 304 STAINLESS STEEL OR THE ENTIRE VALVE SHALL BE WRAPPED TIGHTLY WITH POLYETHYLENE FILM HELD SECURELY WITH ADHESIVE TAPE.
2. IF VALVE IS INSTALLED SO THAT THE TOP OF THE OPERATING NUT IS LESS THAN 30" BELOW FINISHED GRADE, THE VALVE STEM RISER IS NOT REQUIRED.

STEM EXTENSION FABRICATION NOTES:

1. ALL WELDS TO RISER SHAFT SHALL BE FILLET WELD ALL AROUND AS SPECIFIED BELOW.
2. ALL STEEL REQUIRED FOR RISER FABRICATION SHALL BE STRUCTURAL STEEL PER ASTM A36.

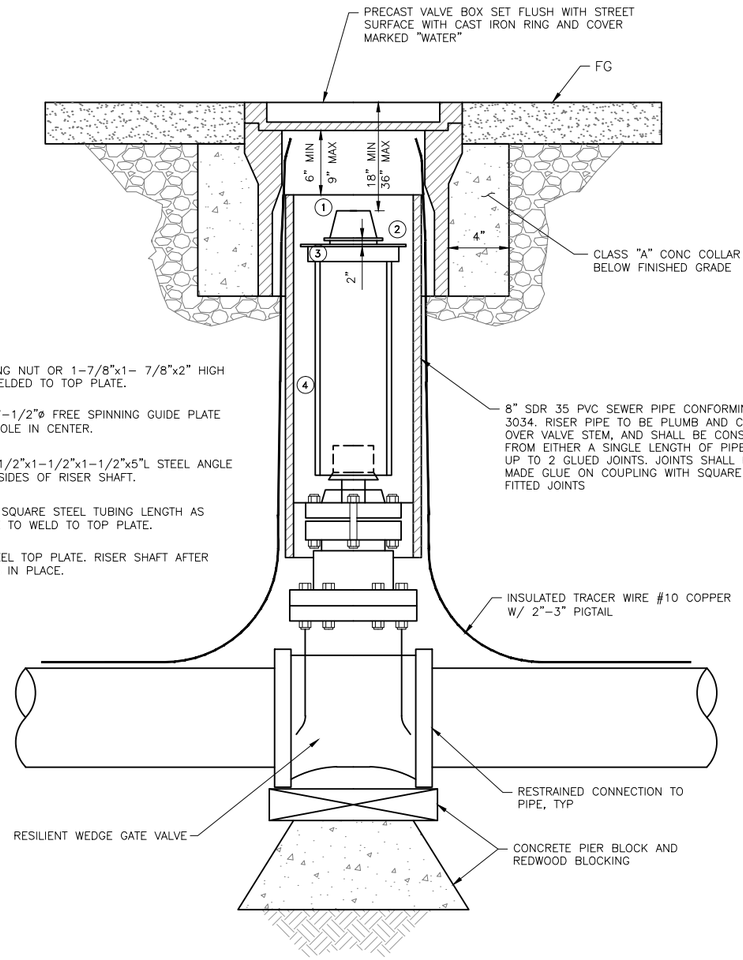

PARTS LIST:

1. VALVE OPERATING NUT OR 1-7/8"x1- 7/8"x2" HIGH SOLID STEEL WELDED TO TOP PLATE.
2. 3/16" THK x 7-1/2"ø FREE SPINNING GUIDE PLATE W/ 3-5/8"ø HOLE IN CENTER.
3. TWO 3/16"x1-1/2"x1-1/2"x1-1/2"x5"L STEEL ANGLE WELD TO TWO SIDES OF RISER SHAFT.
4. 2-1/2"x3/16" SQUARE STEEL TUBING LENGTH AS REQUIRED EDGE TO WELD TO TOP PLATE.
5. 3"x3"x1/4" STEEL TOP PLATE. RISER SHAFT AFTER GUIDE PLATE IS IN PLACE.

TYPICAL GATE VALVE INSTALLATION, 12 INCHES AND SMALLER (1/-)
SCALE: NTS

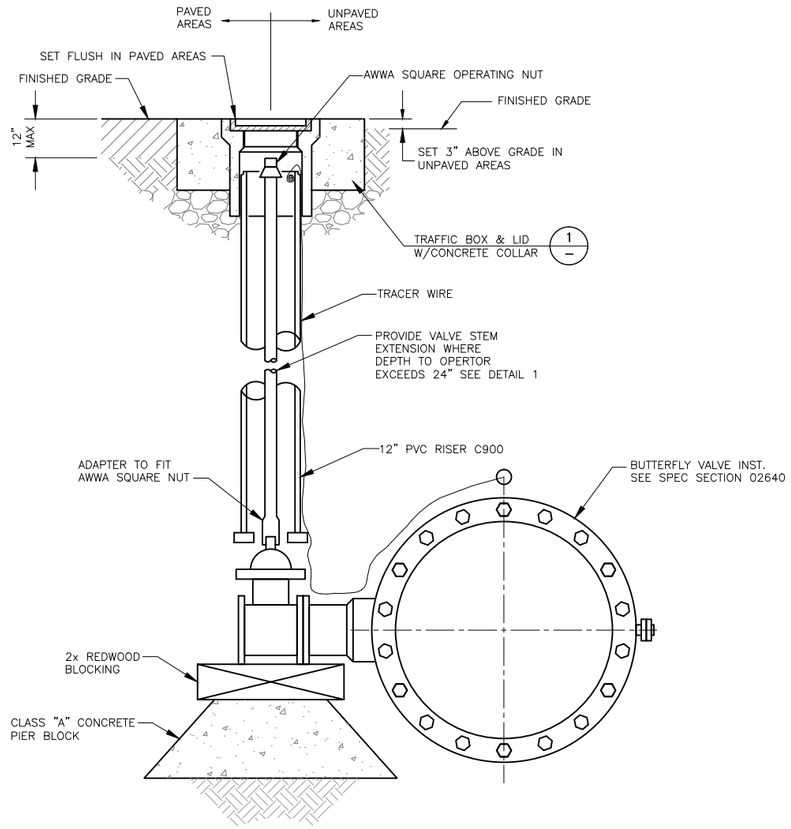

NOTES:

1. PROVIDE PROTECTIVE COATING TO EXTERIOR SURFACE OF VALVE BODY. WRAP WITH WAX TAPE WRAPPING SYSTEM.
2. INSTALL 2-IN BYPASS LINE AROUND EACH BFV.
   a. USE 2-IN AWWA RESILIENT WEDGE GATE VALVE INSTALLED PER DETAIL 1.
   b. USE STAINLESS STEEL THREADED OUTLET TAPPING SLEEVE ON DI PIPE. USE HDPE IPS MOLDED BRANCH SADDLE, PRESSURE CLASS 200 AWWA COMPLIANT ON HDPE PIPE (REQUIRES SPECIAL HEATERS AND EQUIPMENT TO INSTALL). LOCATE SADDLES MIN 1-FT FROM BFV. INSTALL 2-IN CORP STOP ON SERVICE SADDLES.
   c. INSTALL 2-IN PVC SCH. 80 PIPE BETWEEN 2-IN CORP AND 2-IN GATE VALVE ON EACH SIDE IN CONFORMANCE WITH CAW STANDARD DRAWING No. 8A FOR A 2-IN WATER SERVICE.

TYPICAL BUTTERFLY VALVE INSTALLATION, LARGER THAN 12 INCHES (2/-)
SCALE: NTS

REGISTERED PROFESSIONAL ENGINEER
CRAIG JEFFERY SMITH
No. 70883
Exp. 6-30-17
CIVIL
STATE OF CALIFORNIA

REVISIONS

TRANSMISSION MAINS FOR MPWSP MECHANICAL TERMINAL RESERVOIR VALVE DETAILS

CALIFORNIA AMERICAN WATER

AECOM
1333 BROADWAY, SUITE 800
OAKLAND, CALIFORNIA 94612

AECOM

CALIFORNIA AMERICAN WATER

DRAWN BY C. SOMERA
PROJECT ENG'R T. PENG
APPROVED C. SMITH

DATE SEPTEMBER 2015 **USE DIMENSIONS ONLY**
PROJECT 60424498 **SCALE** AS SHOWN

USE APPROVED DRAWINGS ONLY FOR CONSTRUCTION PURPOSES

5005M04

10005005M04

F:\Work\CAL-Am-MPWSP\Terminal-Reservoir\1 Sheets\5005M04.dwg Christina Somera Sep 16, 2015 - 10:04pm

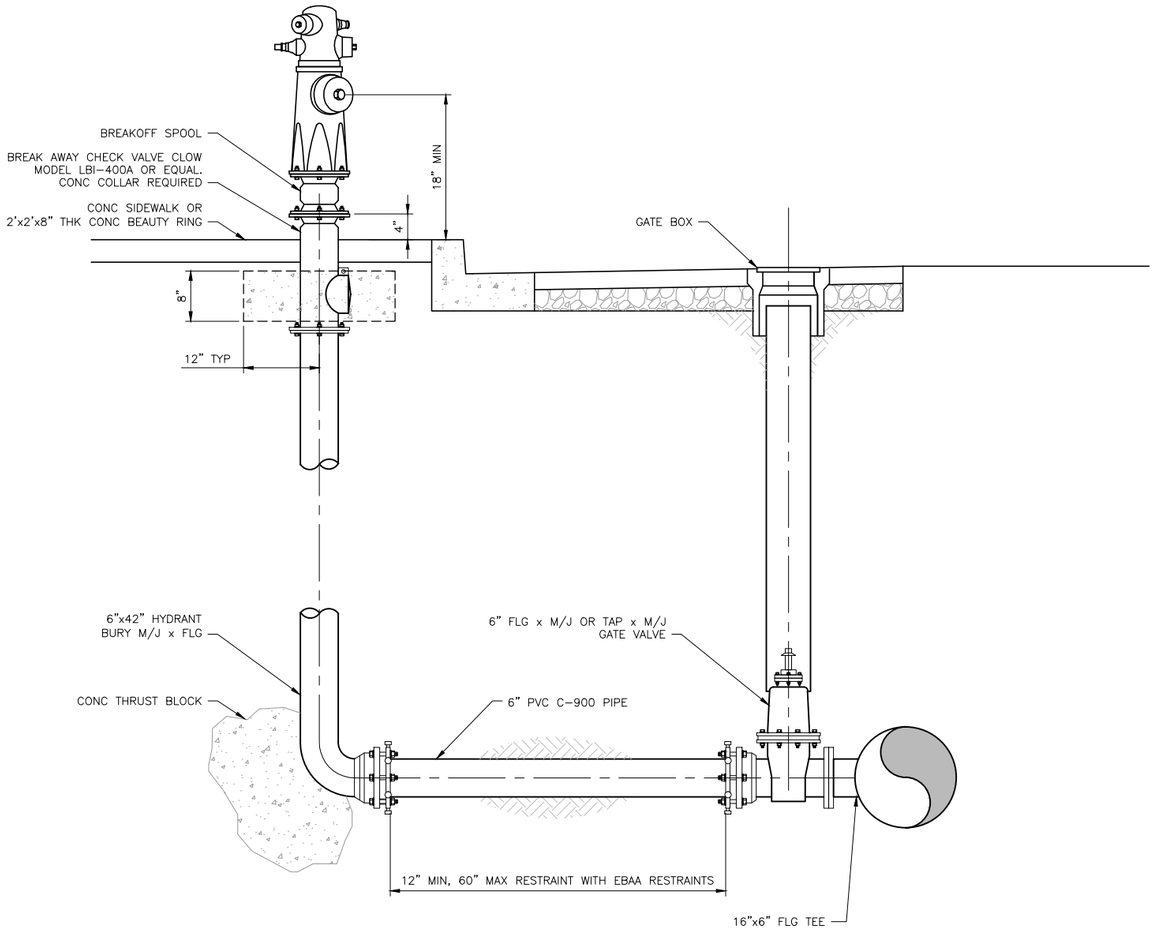

6 INCH FIRE HYDRANT INSTALLATION DETAIL (1)

SCALE: 1"=2'

NOTES:

1. HYDRANT LOCATION TO VARY. CONTRACTOR SHALL VERIFY LOCATION PRIOR TO INSTALLATION BASED ON THE FOLLOWING CONDITIONS:
   - WHEN SIDEWALKS ARE ADJACENT TO CURB, HYDRANTS SHALL BE CENTERED AT BACK OF SIDEWALK.
   - WHEN SIDEWALKS ARE CONSTRUCTED WITH WIDTHS GREATER THAN 6' FROM CURB FACE TO OUTSIDE EDGE OF SIDEWALK HYDRANTS SHALL BE PLACED 24" FROM THE CURB FACE.
   - WHEN INVERTED SHOULDER SECTION IS PERMITTED AND CURB, GUTTER AND SIDEWALKS ARE WAIVED, THE HYDRANT SHALL BE CENTERED 24" BEHIND THE EDGE OF PAVEMENT.
2. REQUIREMENT OF LOCAL AUTHORITY HAVING JURISDICTION SHALL PREVAIL. IN THEIR ABSENCE, THE INSTALLATION SHOWN MAY BE USED.
3. EXACT HYDRANT LOCATION TO BE FIELD DETERMINED BY LOCAL AUTHORITY HAVING JURISDICTION.
4. FIRE HYDRANT CENTERLINE TO EDGE OF CURB IS 24" WHEN PROPERTY LINE IS 6' OR GREATER. FIRE HYDRANT CENTERLINE TO EDGE OF CURB VARIES WHEN PROPERTY LINE IS 24" OR LESS.
5. BAG FIRE HYDRANT UNTIL PLACED INTO SERVICE.
6. INSTALL FIRE HYDRANT PROTECTION BOLLARDS WHEN DIRECTED BY CAL-AM OR FIRE DEPARTMENT.
7. INSTALL FH BLOWOFFS WITHIN CAW SERVICE AREA ONLY.

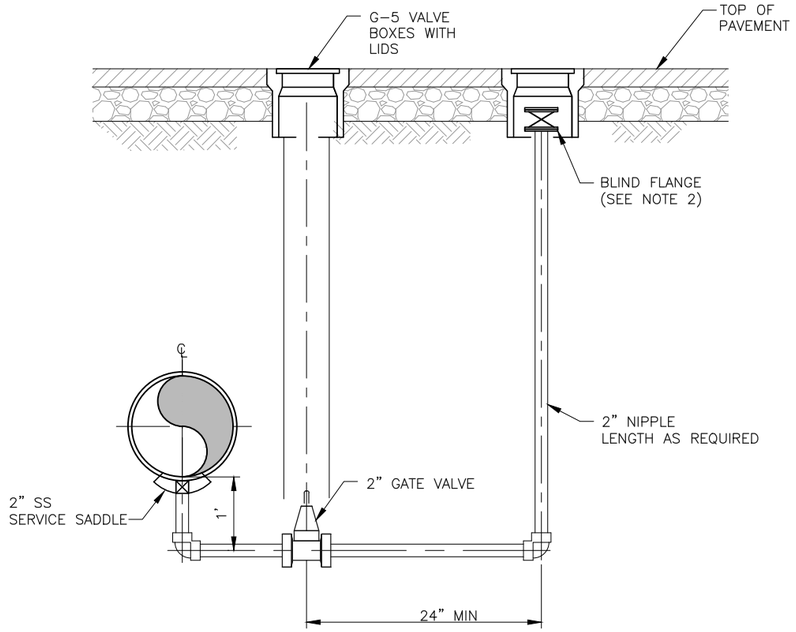

PUMP OUT BLOWOFF DETAIL (2)

SCALE: NTS

NOTES:

1. INSTALL PUMP OUT BLOWOFF OUTSIDE OF CAW SERVICE AREA, (ALL PIPELINES EXCEPT MONTEREY PIPELINE).
2. ALL HARDWARE TO BE 316 SS.

REGISTERED PROFESSIONAL ENGINEER CRAIG JEFFERY SMITH No. 70883 Exp. 6-30-17 CIVIL STATE OF CALIFORNIA

REVISIONS

TRANSMISSION MAINS FOR MPWSP MECHANICAL TERMINAL RESERVOIR BLOWOFF DETAILS

CALIFORNIA AMERICAN WATER

AECOM
1333 BROADWAY, SUITE 800
OAKLAND, CALIFORNIA 94612

AECOM

CALIFORNIA AMERICAN WATER

DRAWN BY C. SOMERA
PROJECT ENG'R T. PENG
APPROVED C. SMITH

DATE SEPTEMBER 2015 USE DIMENSIONS ONLY
PROJECT 60424498 SCALE AS SHOWN

USE APPROVED DRAWINGS ONLY FOR CONSTRUCTION PURPOSES

5005M05

10005005M05

F:\Work\CAL-Am-MPWSP\Terminal-Reservoir\1 Sheets\5005M05.dwg Christina Somera Sep 16, 2015 - 10:04pm

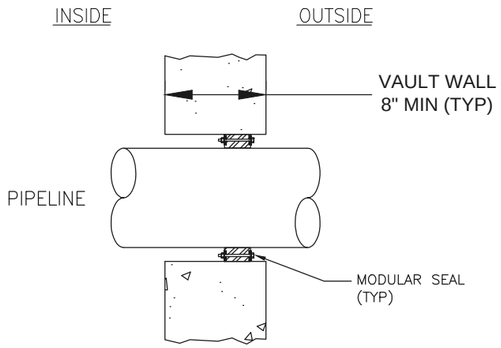

PIPELINE PENETRATION

DETAIL 1 — SCALE: NTS

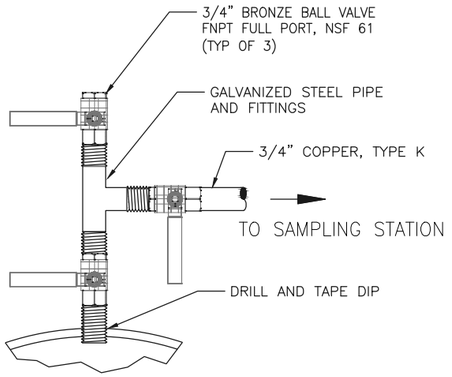

SAMPLING LINE

DETAIL 2 — SCALE: NTS

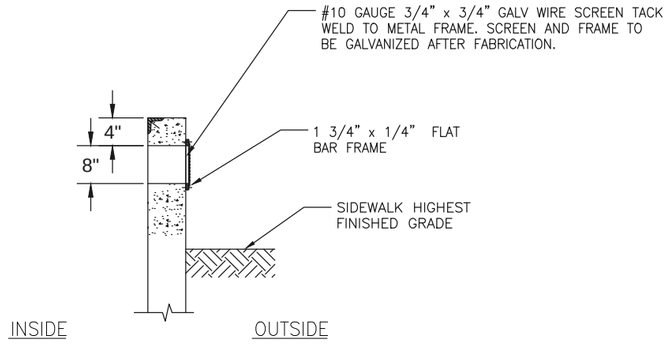

AIR VENT

DETAIL 3 — SCALE: NTS

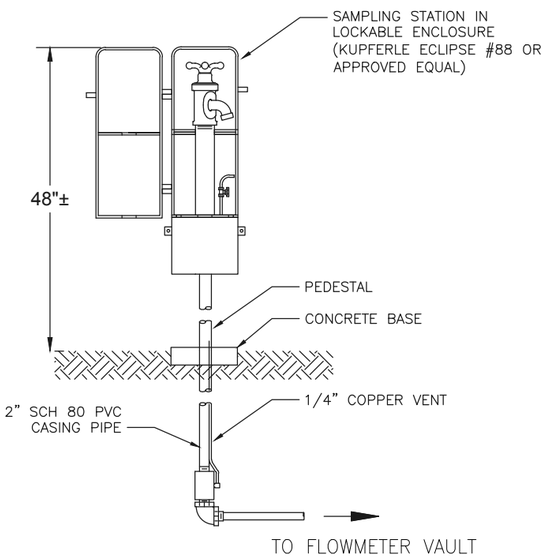

SAMPLING STATION

DETAIL 4 — SCALE: NTS

NOTES:

1. REFER TO CAW STANDARD DRAWING NO. 12 FOR REQUIRED TRENCH WIDTH FOR WATER MAINS.

0 2 4 6
VERT 1" = 2'

REGISTERED PROFESSIONAL ENGINEER
CRAIG JEFFERY SMITH
No. 70883
Exp. 6-30-17
CIVIL
STATE OF CALIFORNIA

REVISIONS

TRANSMISSION MAINS FOR MPWSP
MECHANICAL
TERMINAL RESERVOIR
MISCELLANEOUS DETAIL-1

CALIFORNIA
AMERICAN WATER

AECOM
1333 BROADWAY, SUITE 800
OAKLAND, CALIFORNIA 94612

DRAWN BY C. SOMERA
PROJECT ENG'R T. PENG
APPROVED C. SMITH

DATE SEPTEMBER 2015 USE DIMENSIONS ONLY
PROJECT 60424498 SCALE AS SHOWN

USE APPROVED DRAWINGS ONLY FOR CONSTRUCTION PURPOSES

5005M06

10005005M06

F:\Work\CAL-Am-MPWSP\Terminal-Reservoir\1 Sheets\5005M06.dwg Christina Somera Sep 16, 2015 - 10:04pm

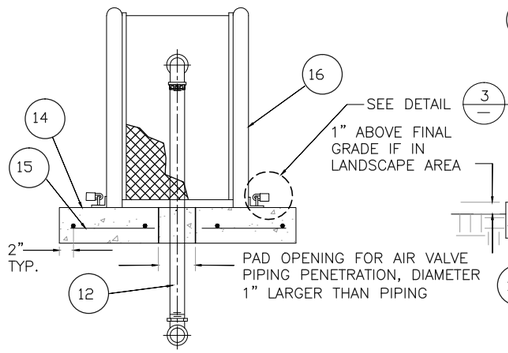

SECTION–A

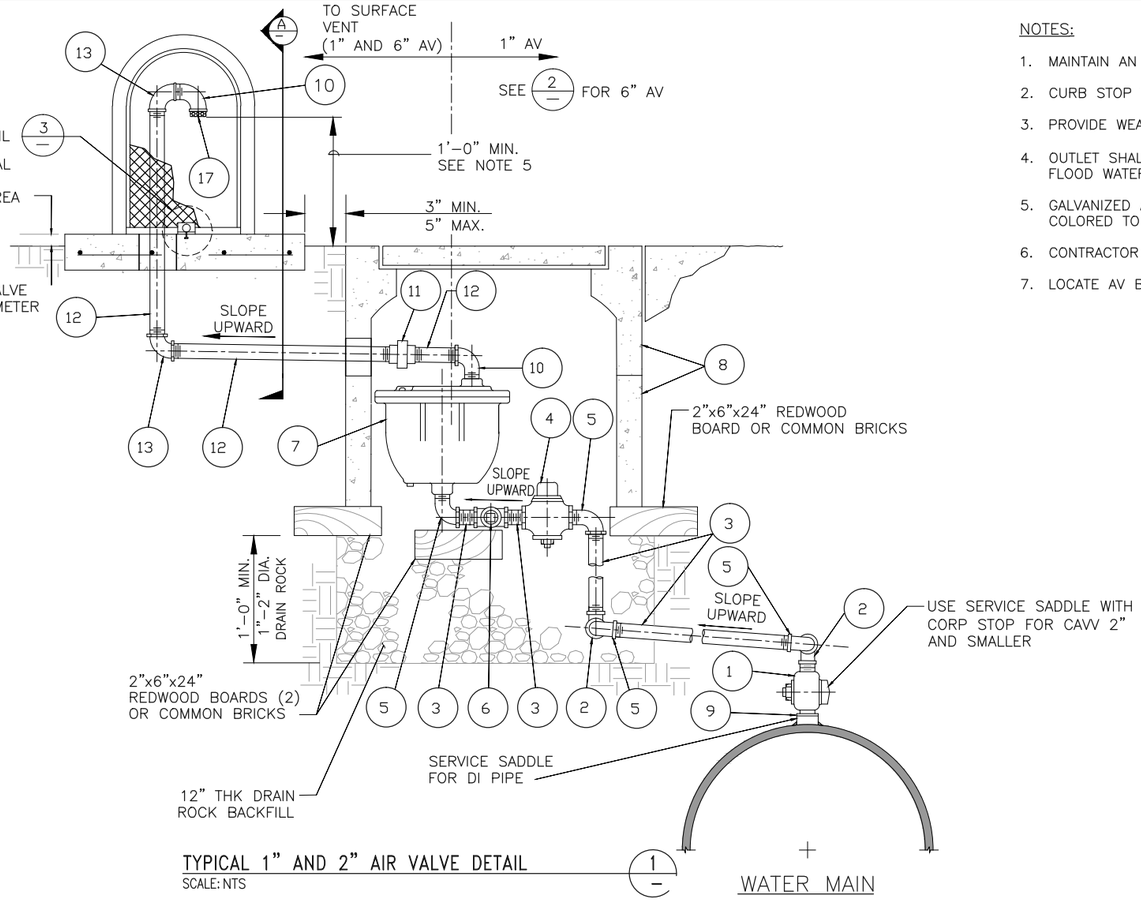

TYPICAL 1" AND 2" AIR VALVE DETAIL 1
SCALE: NTS

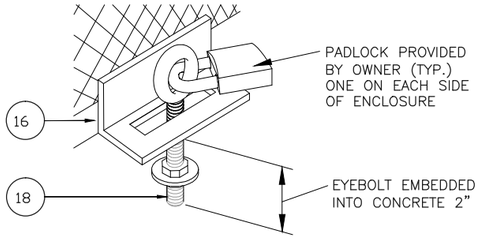

DETAIL 4
SCALE: NTS

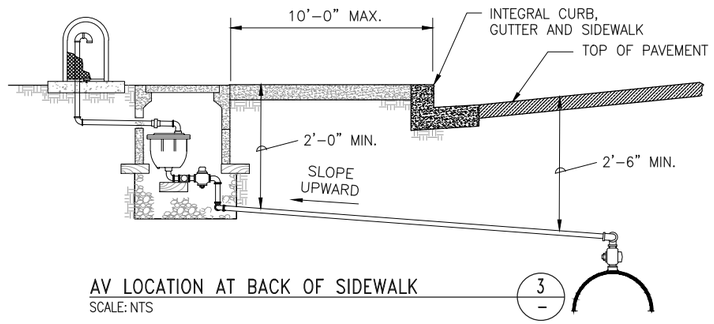

AV LOCATION AT BACK OF SIDEWALK 3
SCALE: NTS

NOTES:

1. MAINTAIN AN UPWARD SLOPE TO PIPE FROM AV AT MAIN TO AIR VALVE VENT.
2. CURB STOP TO BE EXPOSED IN METER BOX AND ACCESSIBLE TO OPERATE.
3. PROVIDE WEATHERPROOF LABEL ON ENCLOSURE WITH AV AND STATION NUMBER.
4. OUTLET SHALL BE A MINIMUM 1'–0" ABOVE FINISHED GRADE OR 1'–0" ABOVE THE CALCULATED 100–YEAR FLOOD WATER LEVEL OR HIGHEST RECORDED WATER LEVEL, WHICHEVER IS HIGHER.
5. GALVANIZED AIR VALVE PIPING ABOVE GRADE SHALL BE COATED WITH TWO COATS OF RUST–OLEUM PAINT COLORED TO MATCH ENCLOSURE COLOR.
6. CONTRACTOR TO FIELD WRAP RISER PIPE AND FITTINGS PER ACWD STD. SPECIFICATIONS.
7. LOCATE AV BOX AS SHOWN ON PLAN AND PROFILE DRAWINGS.

TABLE A

ITEM	DESCRIPTION
1	VALVE
2	90° STRAIGHT ELBOW (RED BRASS) (2)
3	RED BRASS PIPE (4)
4	CURB STOP
5	90° STREET ELBOW (RED BRASS) (4)
6	FIPTxFIPTxFIPT BRASS TEE WITH BRASS PLUG**
7	COMBINATION AIR VACUUM RELIEF VALVE (CAVV)
8	UTILITY BOXES. SEE TABLE B
9	NYLON BUSHING (STEEL MAIN ONLY)**
10	90° STREET ELBOW (GALVANIZED)** (2). SEE NOTE 5
11	UNION (GALVANIZED)**
12	GALVANIZED STEEL PIPE** (3). SEE NOTE 5
13	90° STRAIGHT ELBOW (GALVANIZED)** (2). SEE NOTE 5
14	CONCRETE BASE 20"Wx20"Lx3"D
15	6"/6"x#10/10 WELDED WIRE MESH
16	ENCLOSURE BPDI CGS–1. COLOR SHALL BE GREEN
17	STAINLESS STEEL MESH INSECT SCREEN CAP**
18	THREADED EYEBOLT (GALVANIZED) WITH 7/16" MIN. I.D. (2)

** SIZED THE SAME DIAMETER AS THE AIR VALVE

TABLE B

UTILITY BOXES FOR AIR VALVES

A.V. SIZE	CHRISTY OR APPROVED EQUAL METER BOX	LID
1" CAVV	B24BOX (BOX) W/ B24BOX (EXTENSION)	B24D

REVISIONS

REGISTERED PROFESSIONAL ENGINEER CRAIG JEFFERY SMITH No. 70883 Exp. 6–30–17 CIVIL STATE OF CALIFORNIA

TRANSMISSION MAINS FOR MPWSP MECHANICAL TERMINAL RESERVOIR COMBINATION AIR RELEASE VALVE

CALIFORNIA AMERICAN WATER

AECOM
1333 BROADWAY, SUITE 800
OAKLAND, CALIFORNIA 94612

DRAWN BY C. SOMERA
PROJECT ENG'R T. PENG
APPROVED C. SMITH

DATE SEPTEMBER 2015 USE DIMENSIONS ONLY
PROJECT 60424498 SCALE AS SHOWN

USE APPROVED DRAWINGS ONLY FOR CONSTRUCTION PURPOSES

5005M07

F:\Work\CAL-Am-MPWSP\Terminal-Reservoir\1 Sheets\5005M07.dwg Christina Somera Sep 16, 2015 - 10:05pm

10005005M07

NOTES:

1. COORDINATE SHUT DOWN OF EXISTING WATER PIPE WITH OWNER.
2. RESTRAIN ALL JOINTS.

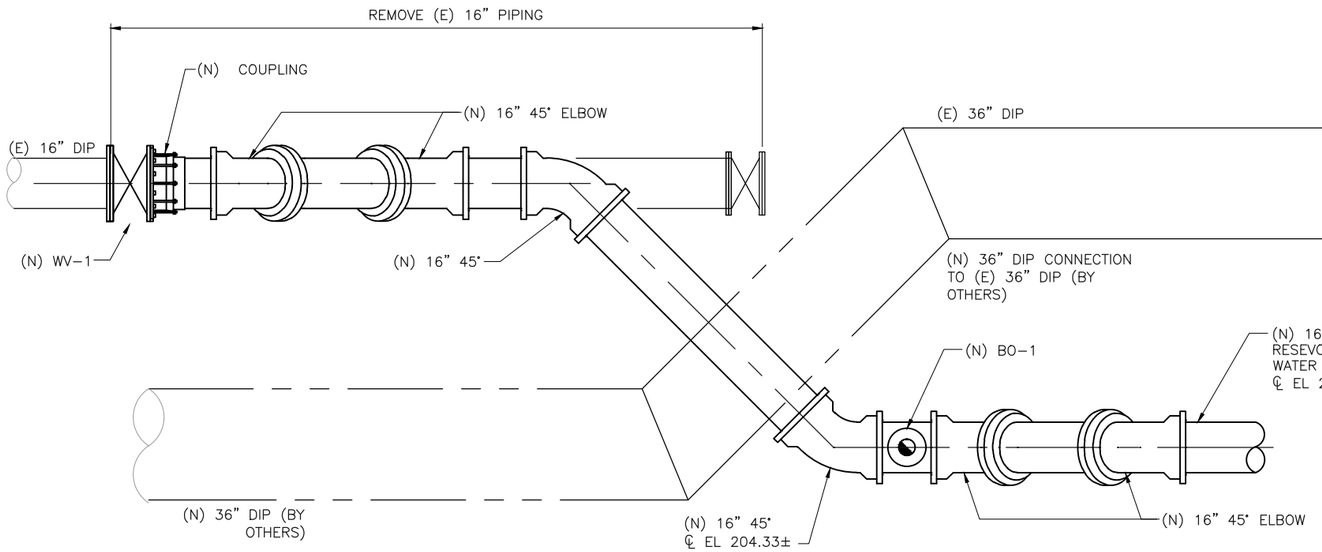

TIE-IN FOR TERMINAL RESERVOIR OUTLET PIPE (1/C06)
SCALE: NTS

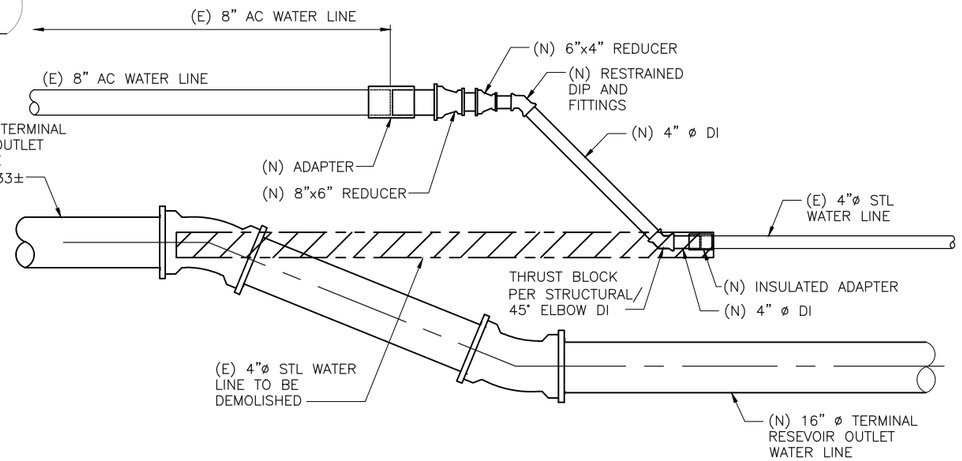

TIE-IN FOR EXISTING PIPELINES (2/C07)
SCALE: NTS

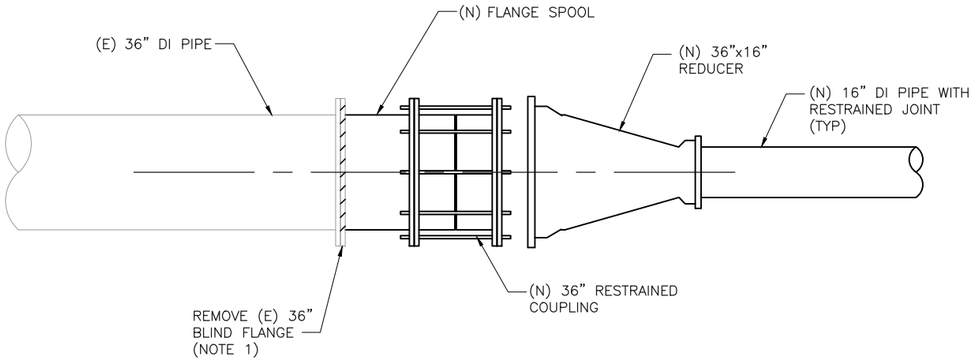

TIE-IN FOR INLET PIPE TO TERMINAL RESERVOIR (3/C10)
SCALE: NTS

REGISTERED PROFESSIONAL ENGINEER
CRAIG JEFFERY SMITH
No. 70883
Exp. 6-30-17
CIVIL
STATE OF CALIFORNIA

REVISIONS

TRANSMISSION MAINS FOR MPWSP
MECHANICAL
TERMINAL RESERVOIR
PIPELINE CONNECTION DETAILS

CALIFORNIA
AMERICAN WATER

AECOM
1333 BROADWAY, SUITE 800
OAKLAND, CALIFORNIA 94612

AECOM
CALIFORNIA AMERICAN WATER

DRAWN BY M. MONTES
PROJECT ENG'R T. PENG
APPROVED C. SMITH

DATE SEPTEMBER 2015 USE DIMENSIONS ONLY
PROJECT 60424498 SCALE AS SHOWN

USE APPROVED DRAWINGS ONLY FOR CONSTRUCTION PURPOSES

5005M08

10005005M08

F:\Work\CAL-Am-MPWSP\Terminal-Reservoir\1 Sheets\5005M08.dwg Christina Somera Sep 16, 2015 - 10:05am

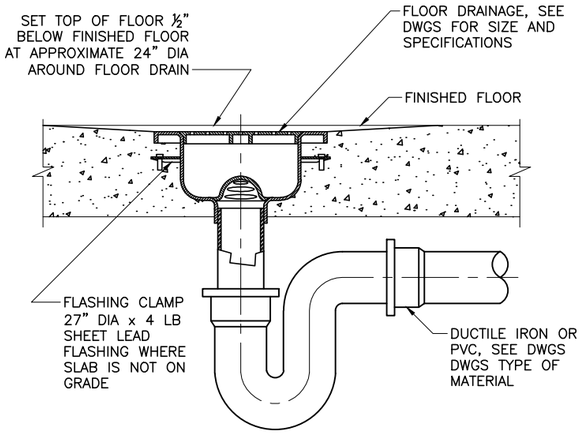

FLOOR DRAIN 1
SCALE: NTS

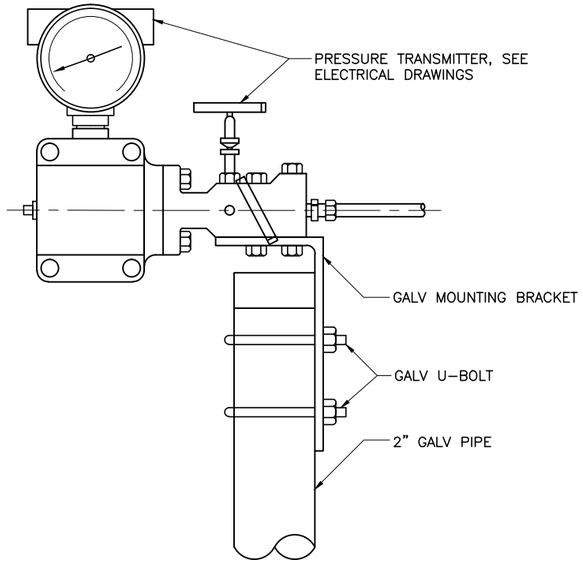

INSTRUMENTATION MOUNTING DETAIL 2
SCALE: NTS

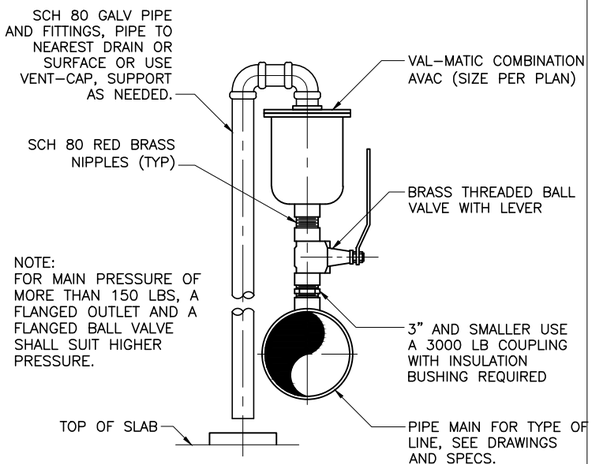

AIR VACUUM/ AIR RELEASE ASSEMBLY 3
SCALE: NTS

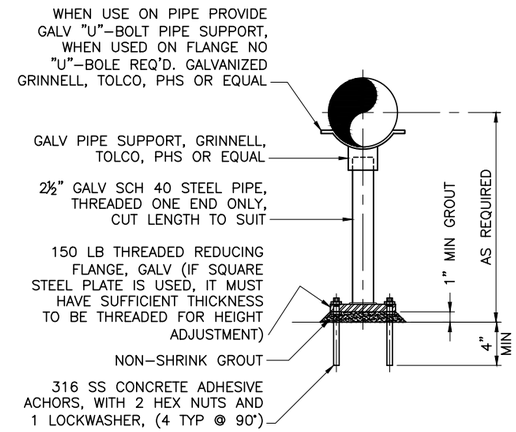

PIPE SUPPORT 4
SCALE: NTS

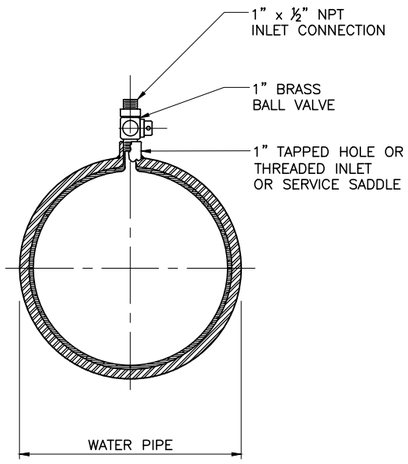

SAMPLE PORT 5
SCALE: NTS

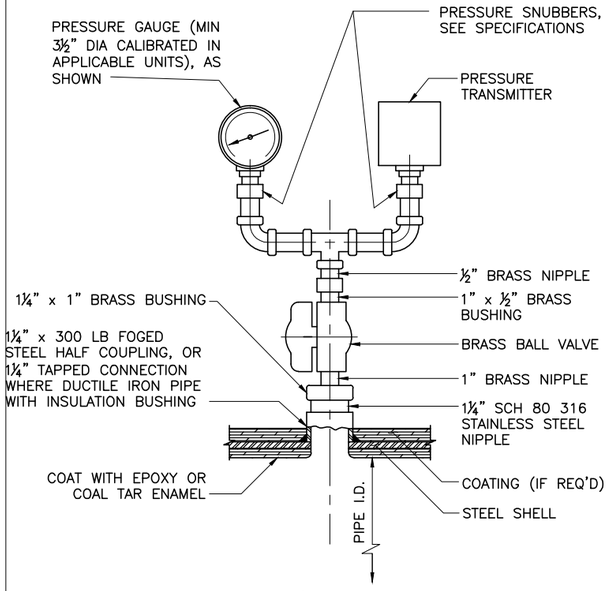

PRESSURE GAUGE/TRANSMITTER ASSEMBLY WITH SEAL 6
SCALE: NTS

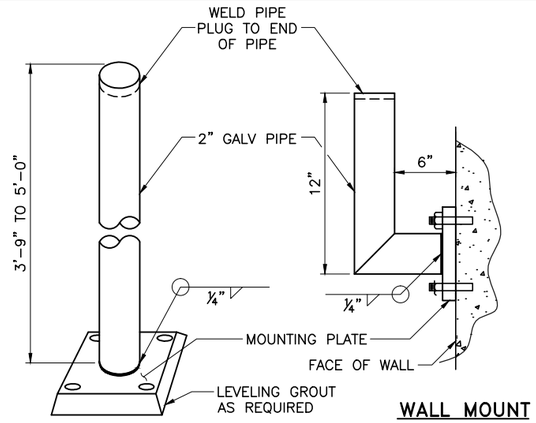

WALL MOUNT

FLOOR STAND

FLOOR STAND / WALL MOUNT 7
SCALE: NTS

NOTE:
1. TYPICAL MOUNTING PLATE: 6" x 6" x 3/16" WITH FOUR 5/8" BOLT HOLES.
2. PROVIDE FOUR 2" x 9/16" CAPSULE ANCHOR BOLTS.

REVISIONS

REGISTERED PROFESSIONAL ENGINEER CRAIG JEFFERS SMITH No. 70883 Exp. 6-30-17 CIVIL STATE OF CALIFORNIA

TRANSMISSION MAINS FOR MPWSP MECHANICAL TERMINAL RESERVOIR MISCELLANEOUS DETAILS

CALIFORNIA AMERICAN WATER

AECOM
1333 BROADWAY, SUITE 800
OAKLAND, CALIFORNIA 94612

AECOM

CALIFORNIA AMERICAN WATER

DRAWN BY M. MONTES
PROJECT ENG'R T. PENG
APPROVED C. SMITH

DATE SEPTEMBER 2015 USE DIMENSIONS ONLY
PROJECT 60424498 SCALE AS SHOWN

USE APPROVED DRAWINGS ONLY FOR CONSTRUCTION PURPOSES

5005M09

10005005M09

F:\Work\CAL-Am-MPWSP\Terminal-Reservoir\1 Sheets\5005M09.dwg Christina Somero Sep 16, 2015 - 10:05pm

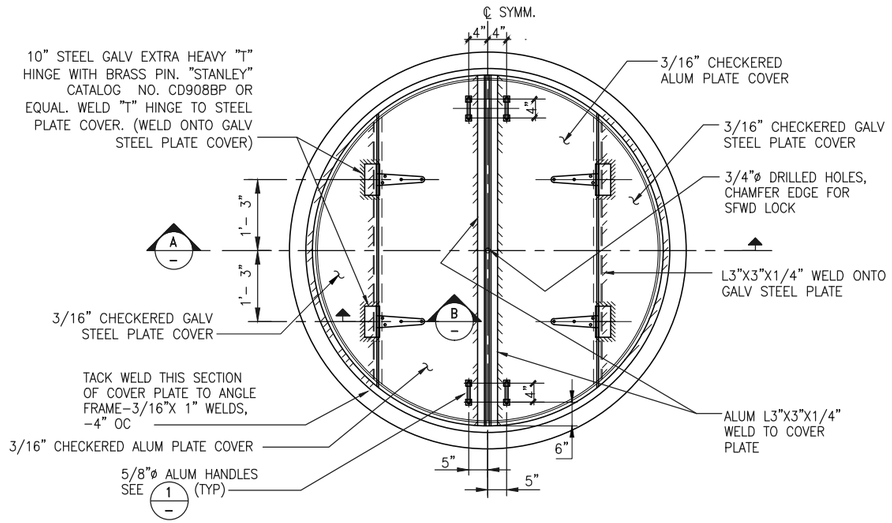

COVER FOR 72" MANHOLE
PLAN
SCALE: NTS

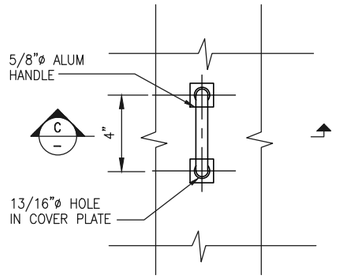

DETAIL 1
SCALE: NTS

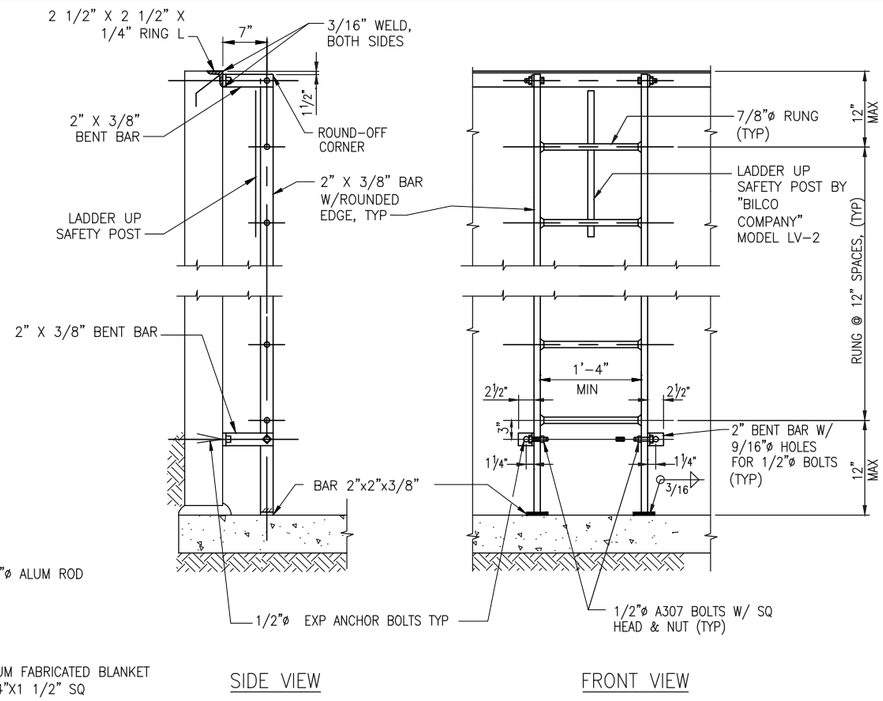

SIDE VIEW

FRONT VIEW

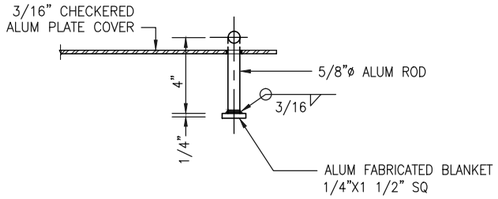

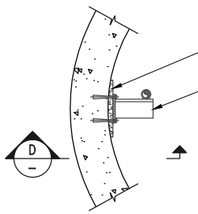

PLAN
SCALE: NTS

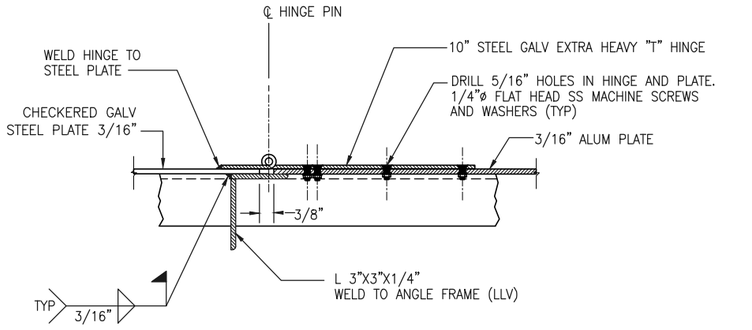

HINGE CONNECTION

SECTION B
SCALE: NTS

SECTION C
SCALE: NTS

LADDER FOR RISERS DETAIL 2
SCALE: NTS

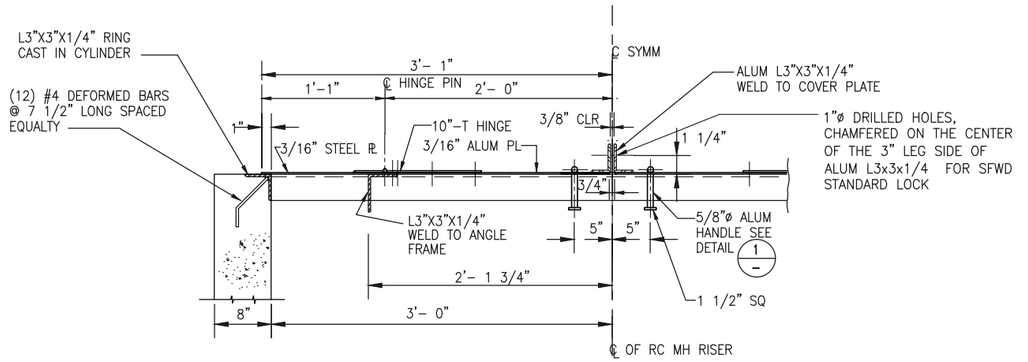

SECTION A
SCALE: NTS

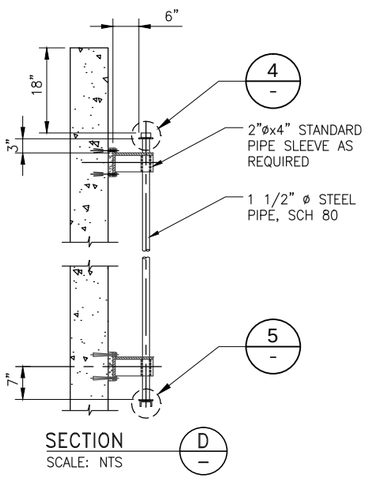

SECTION D
SCALE: NTS

STANDARD VALVE STEM EXTENSION 3
SCALE: NTS (TWO BRACKET REQUIRED)

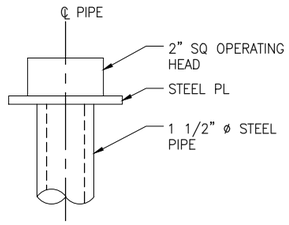

DETAIL 4
SCALE: NTS

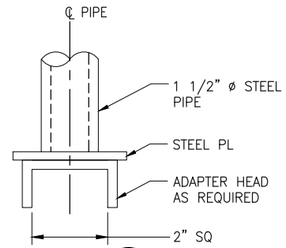

DETAIL 5
SCALE: NTS

NOTES:

1. ALL OPERATING NUTS SHALL BE 2" STD SQ NUT. THE "OPEN" DIRECTION SHALL BE INDICATED BY AN ARROW WITH THE WORD "OPEN" CAST ON THE SKIRT OF THE FLANGE OR AT THE TOP OF THE NUT.
2. ALL WORK PERFORMED SHALL MEET LATEST EDITION OF CALIFORNIA BUILDING CODE AND AWWA CODE REQUIREMENTS.

REVISIONS

REGISTERED PROFESSIONAL ENGINEER CRAIG JEFFERY SMITH No. C 70883 Exp. 6-30-17 CIVIL STATE OF CALIFORNIA

TRANSMISSION MAINS FOR MPWSP MECHANICAL TERMINAL RESERVOIR MANHOLE COVER – SECTIONS & DETAILS

CALIFORNIA AMERICAN WATER

AECOM
1333 BROADWAY, SUITE 800
OAKLAND, CALIFORNIA 94612

DRAWN BY C. SOMERA
PROJECT ENG'R T. PENG
APPROVED C. SMITH

DATE SEPTEMBER 2015 USE DIMENSIONS ONLY
PROJECT 60424498 SCALE AS SHOWN

USE APPROVED DRAWINGS ONLY FOR CONSTRUCTION PURPOSES

5005M10

10005005M10

F:\Work\CAL-Am-MPWSP\Terminal-Reservoir\1 Sheets\5005M10.dwg Christina Somera Sep 16, 2015 - 10:05am

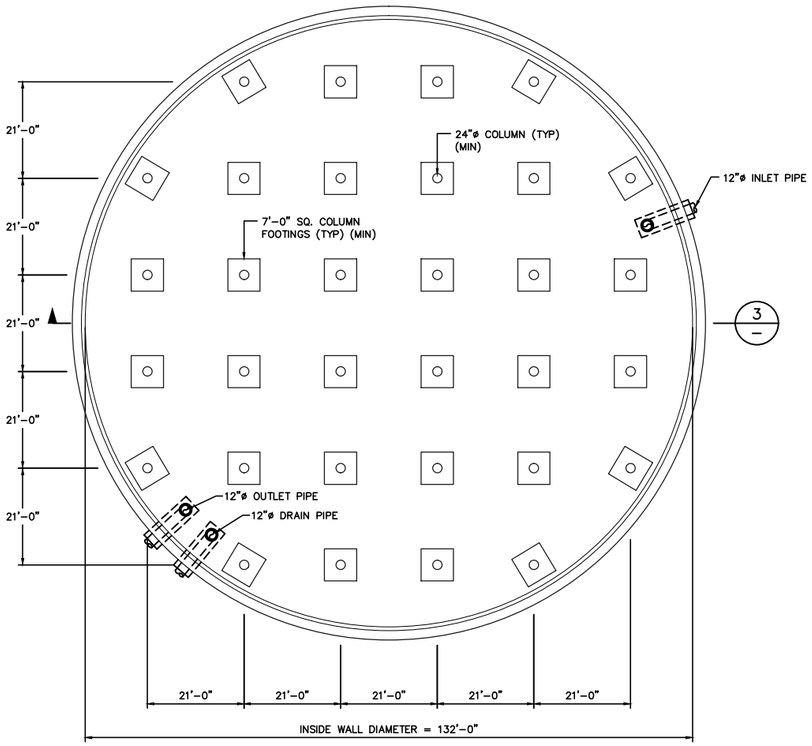

FLOOR PLAN (1)

M11— TANK PLANS AND SECTION, GENERAL NOTES

M12— WALL AND WALL FOOTING DETAILS

M13— PIPE DETAILS

M14— INTERIOR LADDER DETAILS, ROOF HATCH DETAILS, DOWNSPOUT DETAILS

M15— EXTERIOR LADDER DETAILS

DRAWING INDEX

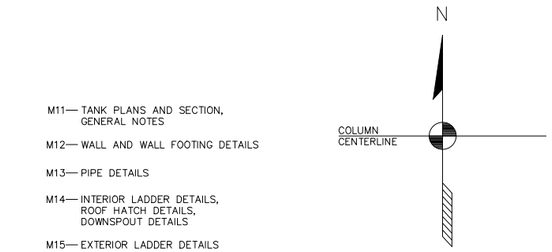

DETAIL LEGEND

AZ	– AZIMUTH	LP	– LOW POINT
℄	– CENTERLINE	MAX	– MAXIMUM
CIRC	– CIRCUMFERENTIAL	MIN	– MINIMUM
CLR	– CLEAR	OC	– ON CENTER
DI	– DUCTILE IRON	P/S	– PRESTRESSING
DWG	– DRAWING	R/C	– REINFORCED CONCRETE
EF	– EACH FACE	SCH	– SCHEDULE
EW	– EACH WAY	SQ	– SQUARE
EL	– ELEVATION	SST	– STAINLESS STEEL
FF	– FINISHED FLOOR	TBD	– TO BE DETERMINED
FG	– FINISHED GRADE	TOF	– TOP OF FLOOR
GALV	– GALVANIZED	TOW	– TOP OF WALL
HP	– HIGH POINT	TYP	– TYPICAL
HW	– HIGH WATER	UNO	– UNLESS NOTED OTHERWISE
IE	– INVERT ELEVATION	VERT	– VERTICAL

ABBREVIATION LEGEND

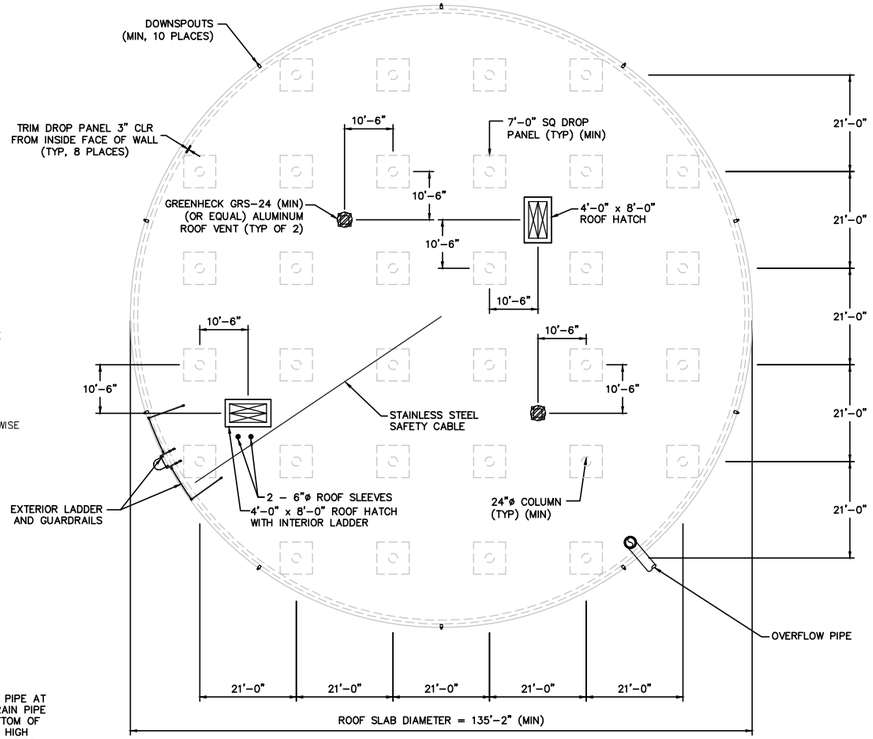

ROOF PLAN (2)

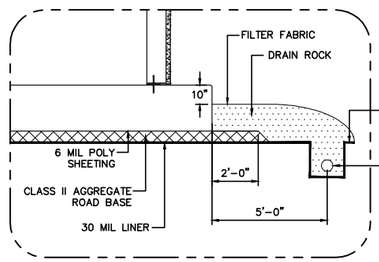

RINGDRAIN DETAIL (A)
(BY GENERAL CONTRACTOR, U.N.O.)

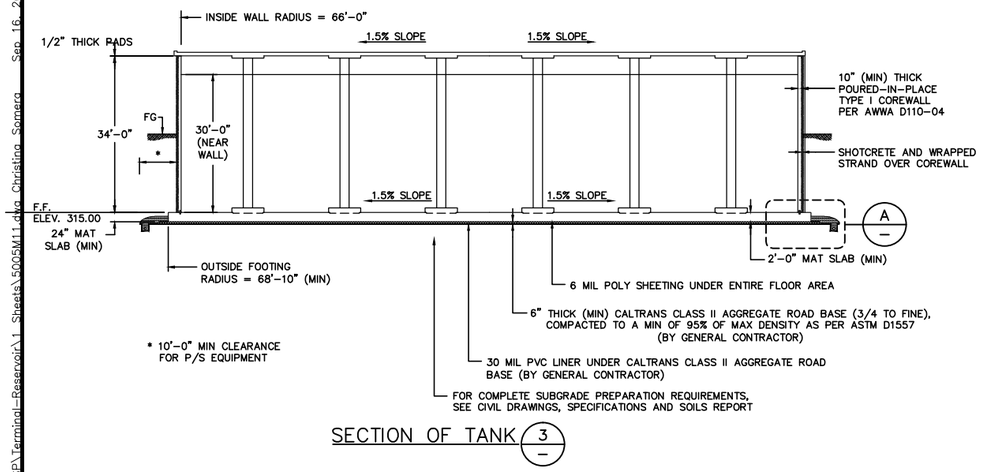

SECTION OF TANK (3)

GENERAL NOTES:

I. DESIGN LOADS

1.	ROOF LOAD	: 20 PSF LIVE (ASSUMED)
2.	LIQUID (WATER)	: 62.5 PCF
3.	SOIL BEARING CAPACITY	: 4000 PSF GROSS (ASSUMED)
4.	EFFECTIVE SEISMIC ACCELERATIONS	: 0.3136g (H), 0.3056g (V) (ASSUMED)
5.	SEISMIC SPECTRAL VELOCITY	: 4.071 FT/SEC (ASCE 7-10)
6.	RISK CATEGORY	: IV

II. BUCKLING CRITERIA OF WALL DESIGN

1. THE INTEGRITY OF THE WALL SHOWN ON THESE DRAWINGS IS STRICTLY PREDICATED ON THE FOLLOWING CONDITIONS:

A. THE STRICT CONFORMANCE TO THE CLOSE STRESS-TOLERANCE AND OTHER REQUIREMENTS OF THE CIRCUMFERENTIAL PRESTRESSING APPLICATION INDICATED IN THE TECHNICAL SPECIFICATIONS.
B. SEE SPECIFICATIONS FOR OUT OF ROUND TOLERANCE.
C. THERE SHALL BE NO BLOCK-OUTS OR OTHER TYPES OF WALL OPENINGS OTHER THAN THOSE SHOWN ON THESE DRAWINGS.

III. CONCRETE REQUIREMENTS

1.	FLOOR, AND FOOTINGS, PIPE ENCASEMENTS	: 4000 PSI (MIN)
2.	ROOF SLAB	: 4000 PSI (MIN)
3.	COLUMNS	: 4000 PSI (MIN)
3.	COREWALL	: 4000 PSI (MIN)
4.	SHOTCRETE	: 4500 PSI (1C:3S) (MIN)

5. ALL CONCRETE EXCEPT SHOTCRETE SHALL HAVE A 6.0 SK/CY (MIN), AND A MAXIMUM W/C RATIO OF 0.42, UNLESS NOTED OTHERWISE
6. SEE TECHNICAL SPECIFICATION FOR COMPLETE MIX DESIGN INFORMATION INCLUDING AGGREGATE SIZE AND ACCEPTABLE ADMIXTURES AND MAXIMUM W/C RATIOS.
7. SEE TECHNICAL SPECIFICATION FOR CONCRETE PLACING AND FORMING PROCEDURES.

IV. REINFORCEMENT REQUIREMENTS

1. ALL REINFORCING IN TANK SHALL CONFORM TO ASTM A-615 GRADE 60 UNLESS OTHERWISE NOTED ON THESE DRAWINGS.
2. REINFORCING STEEL CALLED OUT AS GALVANIZED SHALL HAVE A CLASS 1 COATING IN ACCORDANCE WITH ASTM A767.

V. EARTHWORK REQUIREMENTS

1. MINIMUM COMPACTION OF CRUSHED ROCK AND SUBGRADE UNDER AND AROUND PIPE BLOCKS AND UNDER FLOOR AND FOOTINGS SHALL EQUAL 95% OF MAX DENSITY AS DETERMINED IN ACCORDANCE WITH ASTM D1557.
2. SEE TECHNICAL SPECIFICATIONS FOR COMPLETE REQUIREMENTS.
3. NO RECLAIMED MATERIAL PERMITTED.

VI. APPURTENANCE NOTES

1. WHERE APPURTENANCES REQUIRE ANCHORS TO BE PLACED IN THE WALL EXTERIOR, DRILL AND PLACE AFTER WRAPPING AND BEFORE SHOTCRETING. TAKE EXTREME CARE TO AVOID DAMAGING THE PRESTRESSING. PLACE A STEEL PIPE AROUND THE DRILL BIT TO KEEP THE DRILL BIT FROM COMING IN CONTACT WITH THE PRESTRESSING. INSTALL INSERTS BEFORE SHOTCRETING TO MARK HOLE LOCATION. FOR ALL TYPES OF ANCHORING SYSTEMS, INCLUDING DROP-IN AND EXPANSION WEDGE ANCHORS, FILL HOLE IN SHOTCRETE AND WALL WITH EPOXY BEFORE FINAL INSTALLATION OF ANCHORS TO ENSURE COMPLETE COVERAGE AND PROTECTION OF THE PRESTRESSING.
2. ADHESIVE ANCHORS WITH 1 INCH MAXIMUM EMBEDMENT INTO THE SHOTCRETE MAY ONLY BE USED IN NON-STRUCTURAL APPLICATIONS AND WHEN APPROVED BY THE DESIGN ENGINEER. WHEN DRILLING HOLES IN THE SHOTCRETE, THE DRILL MUST BE EQUIPPED WITH A POSITIVE STOP TO PREVENT DRILLING MORE THAN 1 INCH IN DEPTH. USE EPOXY ADHESIVE ANCHORS ONLY. THE HOLE SHALL BE COMPLETELY FILLED WITH EPOXY TO INSURE COMPLETE COVERAGE AND PROTECTION OF THE PRESTRESSING. DO NOT USE EXPANSION OR DROP-IN ANCHORS.
3. USE SST 316 BOLTS AND ANCHORS UNLESS NOTED OTHERWISE. WHERE SST BOLTS OR ANCHORS ARE IN CONTACT WITH DISSIMILAR METALS, USE INSULATING SLEEVES AND PHENOLIC WASHERS TO ELECTRICALLY ISOLATE THE BOLTS.

VII. SPECIAL INSPECTION

1. SPECIAL INSPECTIONS REQUIRED FOR THIS PROJECT AND SHALL BE PERFORMED IN ACCORDANCE WITH IBC CHAPTER 17. SPECIAL INSPECTIONS SHALL BE PERFORMED BY A REGISTERED DEPUTY INSPECTOR EMPLOYED BY THE OWNER IN THESE CATEGORIES:
   - CONCRETE PLACEMENT
   - CONCRETE ANCHORS
   - GRADING, EXCAVATION AND FILLING
   - STRUCTURAL WELDING
   - REINFORCING STEEL PLACEMENT
   - PRESTRESSING

REGISTERED PROFESSIONAL ENGINEER — JEFFERY C. SMITH — No. 70883 — Exp. 8-30-17 — CIVIL — STATE OF CALIFORNIA

REVISIONS

TRANSMISSION MAINS FOR MPWSP MECHANICAL TERMINAL RESERVOIR TANK PLANS AND SECTIONS

CALIFORNIA
AMERICAN WATER

AECOM
1333 BROADWAY, SUITE 800
OAKLAND, CALIFORNIA 94612

DRAWN BY C. SOMERA
PROJECT ENG'R T. PENG
APPROVED C. SMITH

DATE SEPTEMBER 2015 USE DIMENSIONS ONLY
PROJECT 60424498 SCALE AS SHOWN

USE APPROVED DRAWINGS ONLY FOR CONSTRUCTION PURPOSES

5005M11

10005005M11

F:\Work\CAL-Am-MPWSP\Terminal-Reservoir\1 Sheets\5005M11.dwg Christina Somera Sep 16, 2015 - 10:05am

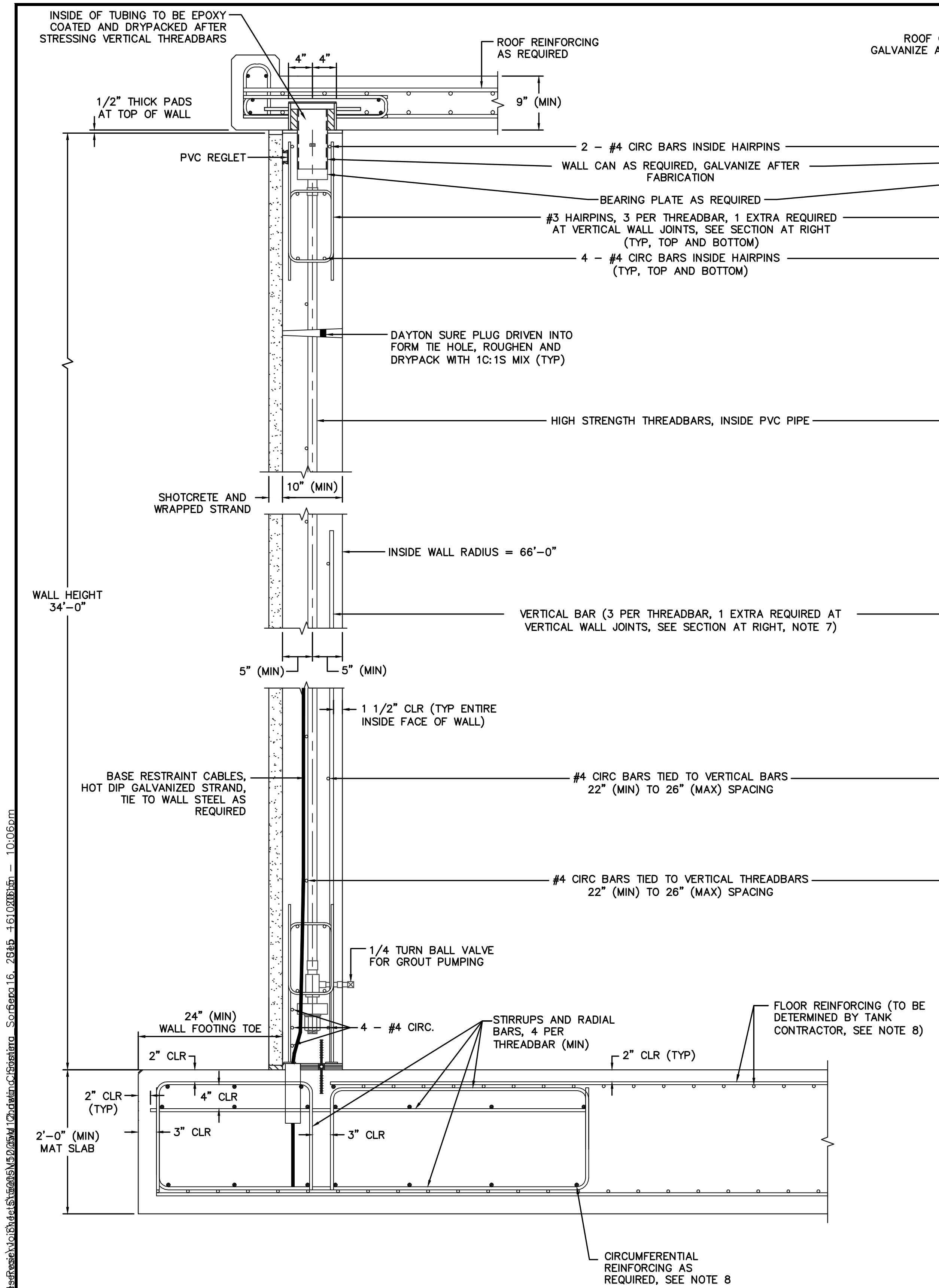

RADIAL SECTION OF WALL AND WALL FOOTING

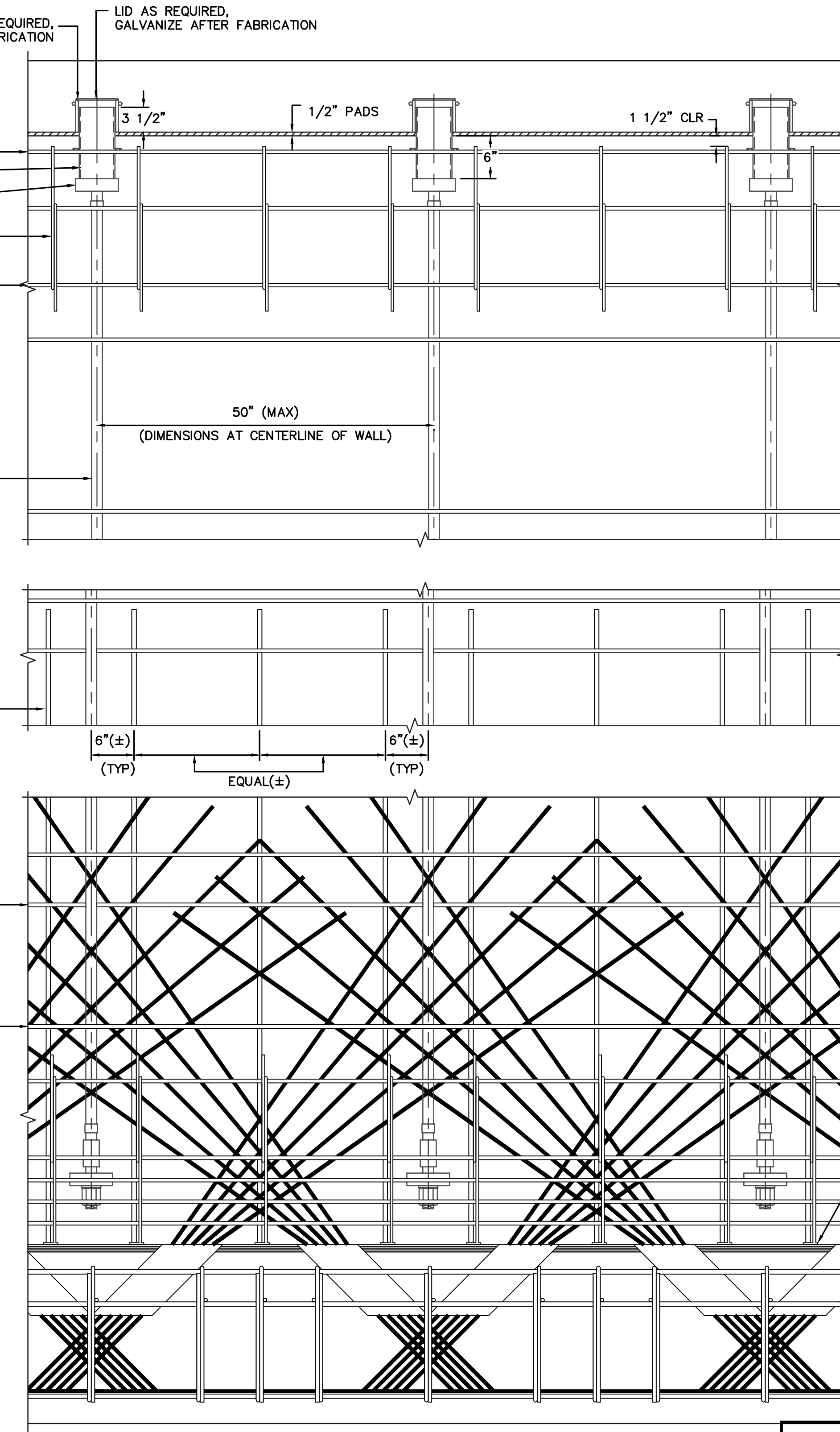

ELEVATION OF WALL AND WALL FOOTING

NOTES:

1) TIE OFF ALL WATERSTOPS AT 12" OC ON BOTH SIDES AND IN BOTH DIRECTIONS.
2) CONCRETE INTERIOR TO THE WALL FOOTING WATERSTOP AND EXTERIOR TO THE WALL FOOTING WATERSTOP SHALL RECEIVE A SMOOTH AND HARD STEEL TROWELED FINISH.
3) MAINTAIN CLEARANCE BETWEEN THE INDIVIDUAL STRANDS IN THE BASE RESTRAINT CABLE SETS (DO NOT BUNDLE).
4) BASE RESTRAINT CABLES MAY BE BENT PRIOR TO INSTALLATION.
5) BASE RESTRAINT CABLES TO BE DETERMINED BY TANK CONTRACTOR.
6) FLARE CABLES IN TANK FOOTING 6" ± CENTER TO CENTER TO FLARING IN THE TANK WALL.
7) MINIMUM LENGTH OF VERTICAL BAR AT INSIDE FACE OF WALL TO BE 40% OF WALL HEIGHT.
8) THE MINIMUM RATIO OF REINFORCING AREA TO CONCRETE AREA IN THE WALL FOOTING (CIRC.) SHALL BE 0.5% (MIN).

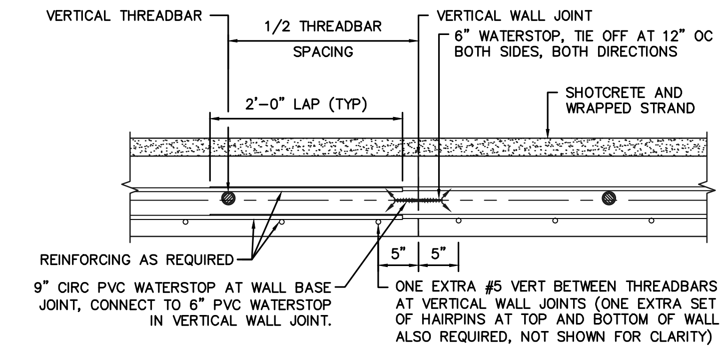

HORIZONTAL SECTION OF VERTICAL WALL JOINT

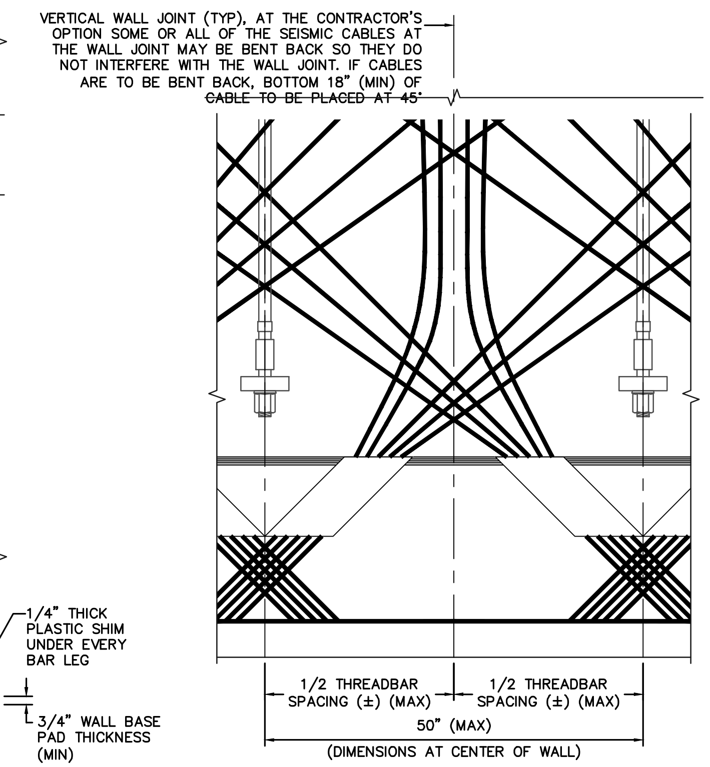

ELEVATION OF VERTICAL WALL JOINT
(WALL AND FOOTING REINFORCING OMITTED FOR CLARITY, WALL JOINTS TO BE DETERMINED, EVENLY SPACED)

REVISIONS

REGISTERED PROFESSIONAL ENGINEER CRAIG JEFFERY SMITH No. 70883 Exp. 6-30-17 CIVIL STATE OF CALIFORNIA

TRANSMISSION MAINS FOR MPWSP
MECHANICAL
TERMINAL RESERVOIR
TANK WALL AND WALL FOOTING DETAILS

CALIFORNIA AMERICAN WATER

AECOM
1333 BROADWAY, SUITE 800
OAKLAND, CALIFORNIA 94612

AECOM

CALIFORNIA AMERICAN WATER

DRAWN BY C. SOMERA
PROJECT ENG'R T. PENG
APPROVED C. SMITH

DATE SEPTEMBER 2015
PROJECT 60424498
USE DIMENSIONS ONLY
SCALE AS SHOWN

USE APPROVED DRAWINGS ONLY FOR CONSTRUCTION PURPOSES

5005M12

10005005M12

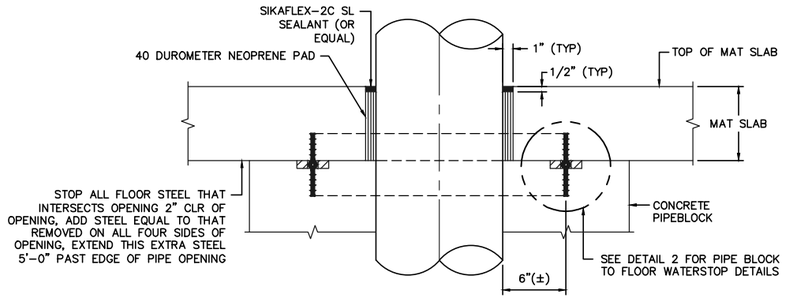

TYPICAL PIPE ENTRANCE THROUGH FLOOR DETAIL 1

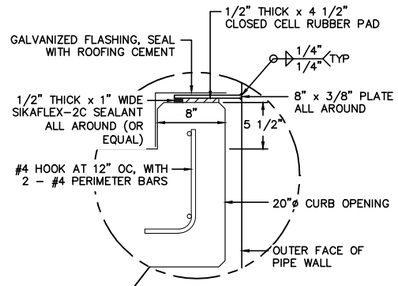

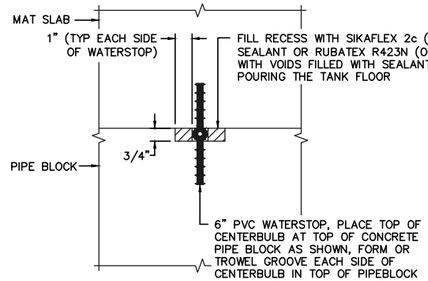

PIPE BLOCK TO FLOOR WATERSTOP DETAILS 2

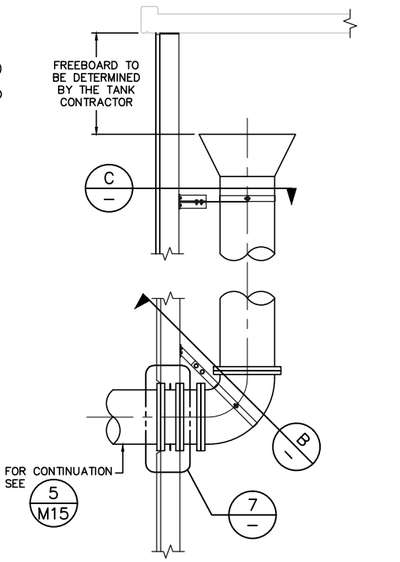

OVERFLOW PIPE ENTRANCE THROUGH WALL 3

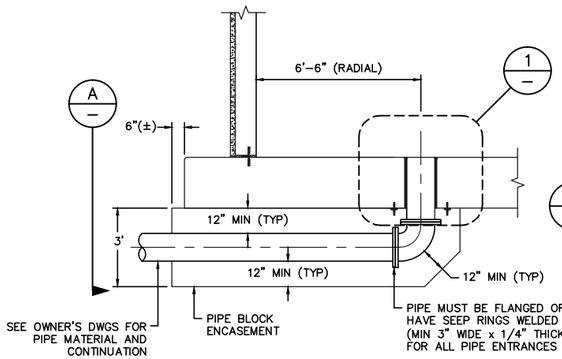

DRAIN PIPE ENTRANCE THROUGH FLOOR DETAIL 4

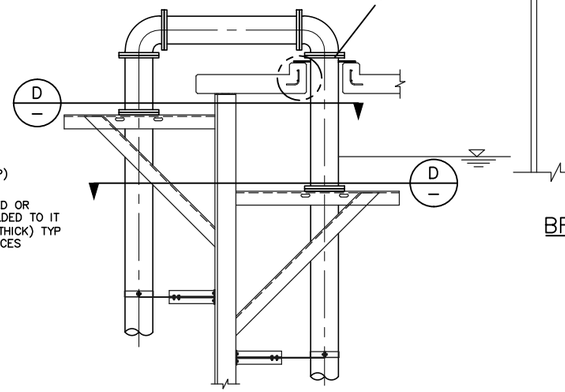

ROOF PENETRATION FOR 12"ø INLET PIPE 5

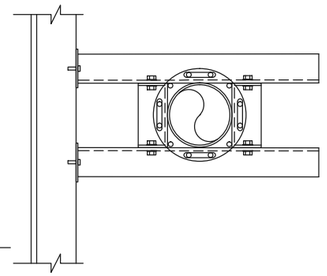

INLET PIPE BRACKET DETAILS D

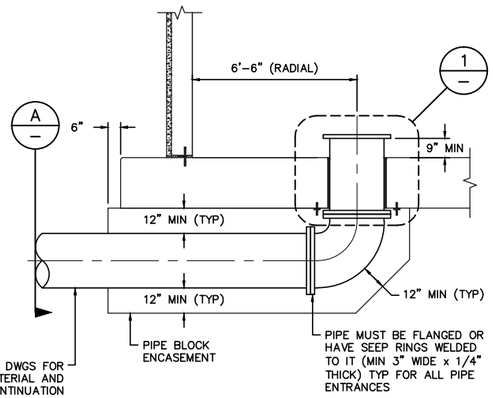

OUTLET PIPE ENTRANCE THROUGH FLOOR DETAIL 6

PIPE BRACKET DETAILS C

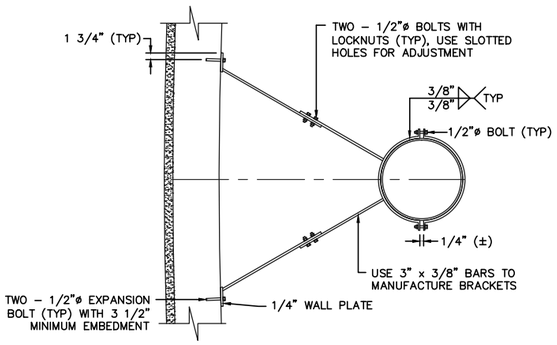

PIPE BRACKET DETAILS B

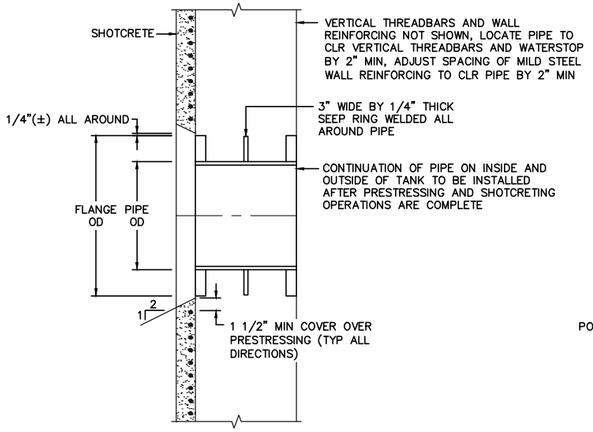

SST 304 PIPE ENTRANCE THROUGH WALL DETAIL 7

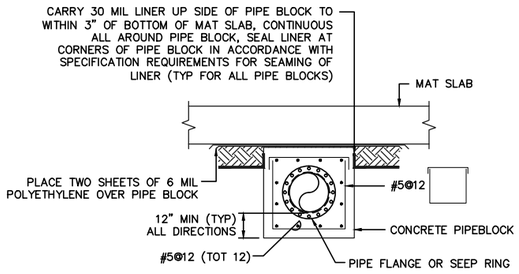

SECTION A

PIPE BRACKET NOTES:

1) ALL MATERIAL FOR INLET PIPE BRACKETS TO BE SST 316.
2) USE SST 316 FOR ALL BOLTS NOT FULLY ENCASED IN CONCRETE UNLESS NOTED OTHERWISE.
3) WHERE SST BOLTS ARE IN CONTACT WITH DISSIMILAR METALS, USE INSULATING SLEEVES AND PHENOLIC WASHERS TO ELECTRICALLY ISOLATE THE BOLTS.

90% PROGRESS SET
AUGUST 2015

NOT FOR CONSTRUCTION

REVISIONS

TRANSMISSION MAINS FOR MPWSP MECHANICAL TERMINAL RESERVOIR TANK PIPE DETAILS

CALIFORNIA AMERICAN WATER

AECOM
1333 BROADWAY, SUITE 800
OAKLAND, CALIFORNIA 94612

DRAWN BY C. SOMERA
PROJECT ENG'R T. PENG
APPROVED C. SMITH

DATE AUGUST 2015
PROJECT 60424498

USE DIMENSIONS ONLY
SCALE AS SHOWN

USE APPROVED DRAWINGS ONLY FOR CONSTRUCTION PURPOSES

5005M13

F:\Work\CAL-Am-MPWSP\Terminal-Reservoir\11 Sheets\5005M13.dwg Christina Somera Sep 16, 2015 - 10:06pm

10005005M13

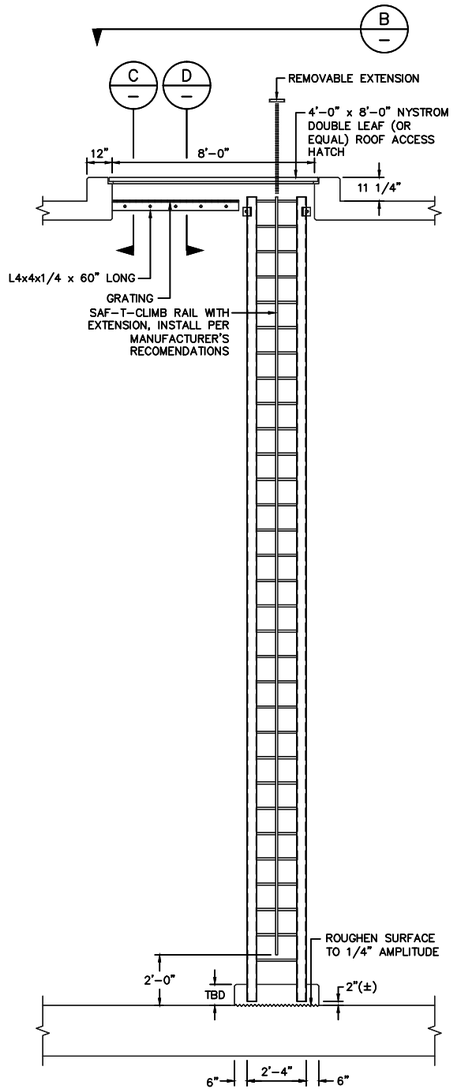

INTERIOR LADDER AND ROOF HATCH 1

(SAFETY CAGE OMITTED FOR CLARITY)

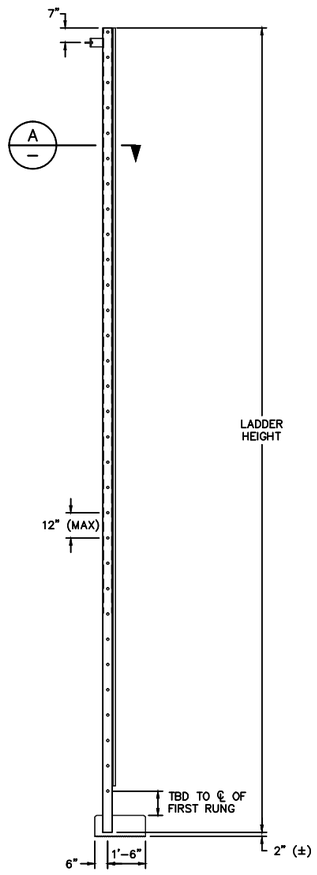

ELEVATION OF INTERIOR LADDER 2

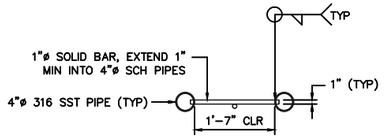

SECTIONS A

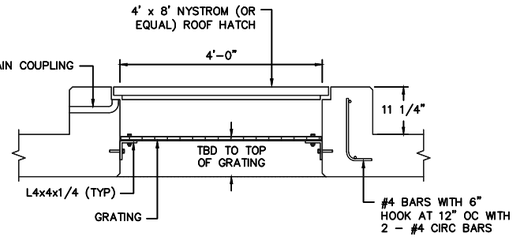

SECTION C

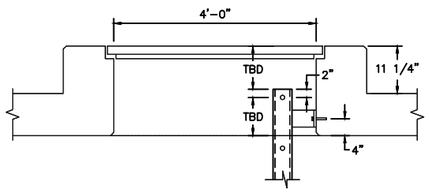

SECTION D

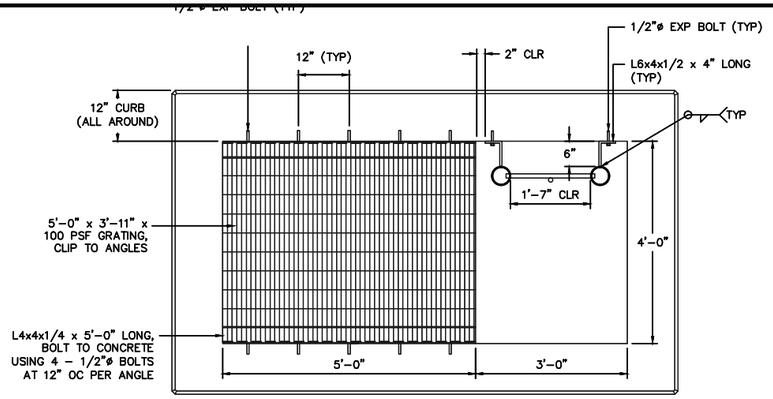

SECTION B

(ROOF HATCH NOT SHOWN)

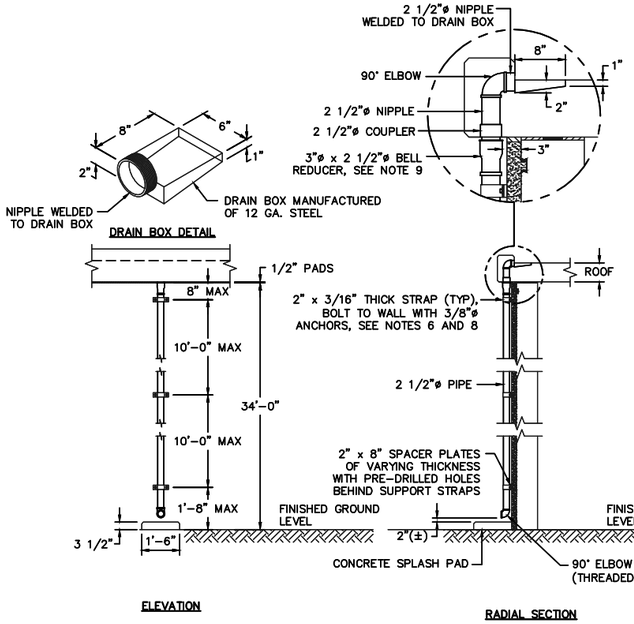

DOWNSPOUT DETAILS 3

(10 DOWNSPOUTS REQUIRED (MIN), EVENLY SPACED)

INTERIOR LADDER NOTES:

1) ALL MATERIAL FOR INTERIOR LADDER CAGE, PIPE SIDERAILS, RUNGS BRACKETS, SAF–T–CLIMB, AND BASE PLATES TO BE SST 316.
2) ROOF HATCH GRATING TO BE MANUFACTURED OF FIBERGLASS OR SST 316.
3) LADDER RUNGS TO BE SOLID BARS.
4) ALL WELDS TO BE 1/4" MINIMUM.
5) ROOF HATCH TO BE MANUFACTURED TBD.
6) ALL ALUMINUM IN CONTACT WITH CONCRETE MUST BE COATED WITH A HEAVY BITUMASTIC COATING OR EPOXY PAINT.
7) USE SST 316 FOR ALL BOLTS UNLESS NOTED OTHERWISE.
8) WHERE SST BOLTS ARE IN CONTACT WITH DISSIMILAR METALS, USE INSULATING SLEEVES AND PHENOLIC WASHERS TO ELECTRICALLY ISOLATE THE BOLTS.

DOWNSPOUT NOTES:

1) DRAIN BOX, SPACER PLATES AND STRAPS TO BE MANUFACTURED OF CARBON STEEL WITH A MINIMUM YIELD STRENGTH OF 30 KSI.
2) DRAIN BOX, SPACER PLATES AND STRAPS TO BE HOT–DIP GALVANIZED AFTER FABRICATION AND DRILLING.
3) PIPE TO BE SCH 10 (MIN) GALVANIZED CARBON STEEL.
4) PLACE DRAIN BOX TO CLR ROOF STEEL BY 2" (TYP), SOME #4 CIRC BARS IN ROOF EDGE MAY TOUCH PIPE FITTINGS TO MAINTAIN REQUIRED CONCRETE COVERAGE.
5) USE SST 316 FOR ALL BOLTS UNLESS NOTED OTHERWISE.
6) WHERE SST BOLTS ARE IN CONTACT WITH DISSIMILAR METALS, USE INSULATING SLEEVES AND PHENOLIC WASHERS TO ELECTRICALLY ISOLATE THE BOLTS.
7) WHERE SST BOLTS ARE PLACED IN THE WALL EXTERIOR, DRILL AND PLACE AFTER WRAPPING AND BEFORE SHOTCRETING. TAKE EXTREME CARE TO AVOID DAMAGING PRESTRESSING STRAND. PLACE A STEEL PIPE AROUND THE DRILL BIT TO KEEP BIT FROM COMING IN CONTACT WITH THE STRAND. INSERT BOLTS BEFORE SHOTCRETING TO MARK HOLE LOCATION. PACK HOLE IN SHOTCRETE WITH EPOXY BEFORE FINAL INSTALLATION OF BOLTS TO INSURE COMPLETE COVERAGE OF STRAND.
8) THE 2 1/2"ø NIPPLE SCREWS INTO THE BOTTOM SIDE OF THE ENCASED COUPLER. THE 3"ø BELL REDUCER DOES NOT ATTACH TO THE PIPE WITH THREADS, BUT ACTS AS A FUNNEL. THIS ELIMINATES THE PROBLEM ARISING OUT OF SLIGHT MISALIGNMENT OF THE COUPLING.

REGISTERED PROFESSIONAL ENGINEER — CRAIG JEFFERS SMITH — No. 70883 — Exp. 6–30–17 — CIVIL — STATE OF CALIFORNIA

REVISIONS

TRANSMISSION MAINS FOR MPWSP MECHANICAL TERMINAL RESERVOIR TANK INTERIOR LADDER, ROOF HATCH & DOWNSPOUT DETAILS

CALIFORNIA AMERICAN WATER

AECOM
1333 BROADWAY, SUITE 800
OAKLAND, CALIFORNIA 94612

DRAWN BY C. SOMERA
PROJECT ENG'R T. PENG
APPROVED C. SMITH

DATE SEPTEMBER 2015 USE DIMENSIONS ONLY
PROJECT 60424498 SCALE AS SHOWN

USE APPROVED DRAWINGS ONLY FOR CONSTRUCTION PURPOSES

5055M14

F:\Work\CAL-Am-MPWSP\Terminal-Reservoir\1 Sheets\5005M14.dwg Christina Somera Sep 16, 2015 - 10:06pm

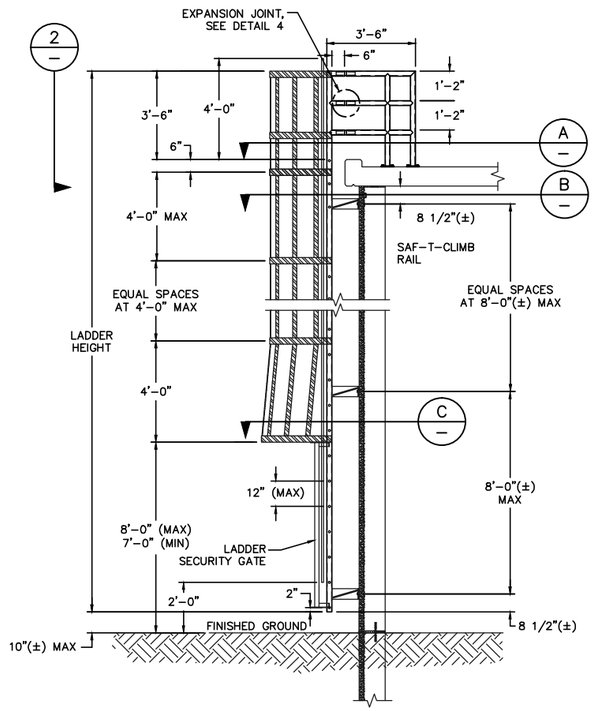

ELEVATION OF EXTERIOR LADDER 1

EXTERIOR LADDER NOTES:

1) ALL MATERIAL FOR EXTERIOR LADDER CAGES, LADDER GATE, PIPE SIDERAILS, RUNGS, BRACKETS AND BASE PLATES TO BE ALUMINUM 6061-T6.
2) ALL WELDS TO BE 1/4" MINIMUM.
3) ALL ALUMINUM IN CONTACT WITH CONCRETE MUST BE COATED WITH A HEAVY BITUMASTIC COATING OR EPOXY PAINT.
4) USE SST 316 FOR ALL BOLTS UNLESS NOTED OTHERWISE.
5) WHERE SST BOLTS ARE IN CONTACT WITH DISSIMILAR METALS, USE INSULATING SLEEVES AND PHENOLIC WASHERS TO ELECTRICALLY ISOLATE THE BOLTS.
6) WHERE SST BOLTS PLACED IN THE WALL EXTERIOR, DRILL AND PLACE AFTER WRAPPING AND BEFORE SHOTCRETING. TAKE EXTREME CARE TO AVOID DAMAGING PRESTRESSING STRAND. PLACE A STEEL PIPE AROUND THE DRILL BIT TO KEEP BIT FROM COMING IN CONTACT WITH THE STRAND. INSERT BOLTS BEFORE SHOTCRETING TO MARK HOLE LOCATION. PACK HOLE IN SHOTCRETE WITH EPOXY BEFORE FINAL INSTALLATION OF BOLTS TO INSURE COMPLETE COVERAGE OF STRAND.

LADDER GATE DETAIL 3

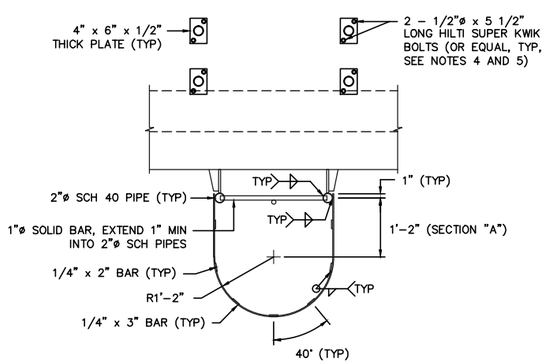

SECTION A

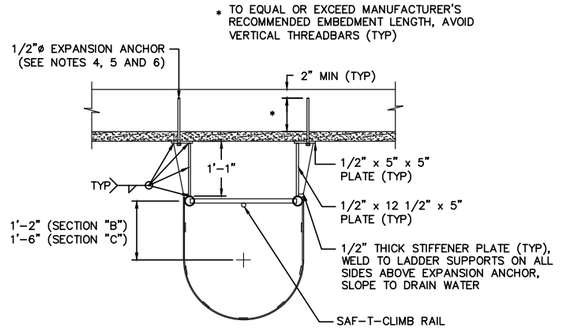

SECTION B C

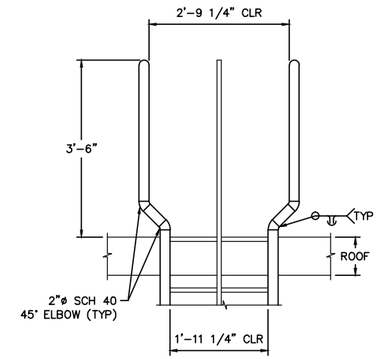

LADDER FLARE 2

(CAGE NOT SHOWN, FLARE CAGE TO MEET WIDENED SUPPORTS AT TOP OF LADDER)

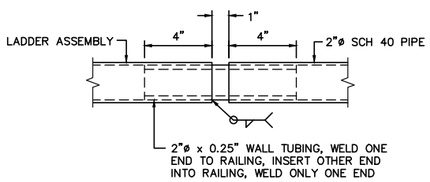

EXPANSION JOINT DETAIL 4

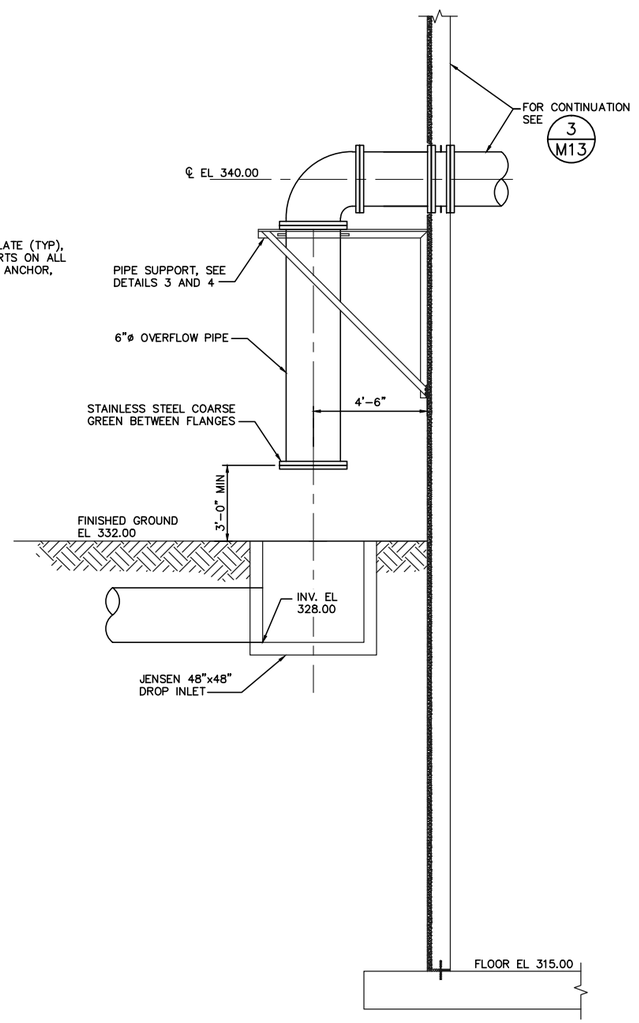

OVERFLOW DISCHARGE PIPE 5

REVISIONS

REGISTERED PROFESSIONAL ENGINEER CRAIG JEFFERS SMITH No. 70883 Exp. 6-30-17 CIVIL STATE OF CALIFORNIA

TRANSMISSION MAINS FOR MPWSP
MECHANICAL
TERMINAL RESERVOIR
TANK EXTERIOR LADDER DETAILS

CALIFORNIA
AMERICAN WATER

AECOM
1333 BROADWAY, SUITE 800
OAKLAND, CALIFORNIA 94612

AECOM

CALIFORNIA AMERICAN WATER

DRAWN BY C. SOMERA
PROJECT ENG'R T. PENG
APPROVED C. SMITH

DATE SEPTEMBER 2015 USE DIMENSIONS ONLY
PROJECT 60424498 SCALE AS SHOWN

USE APPROVED DRAWINGS ONLY FOR CONSTRUCTION PURPOSES

5005M15

F:\Work\CAL-Am-MPWSP\Terminal-Reservoir\11 Sheets\5005M15.dwg Christina Somero Sep 16, 2015 - 10:06am

10005005M15

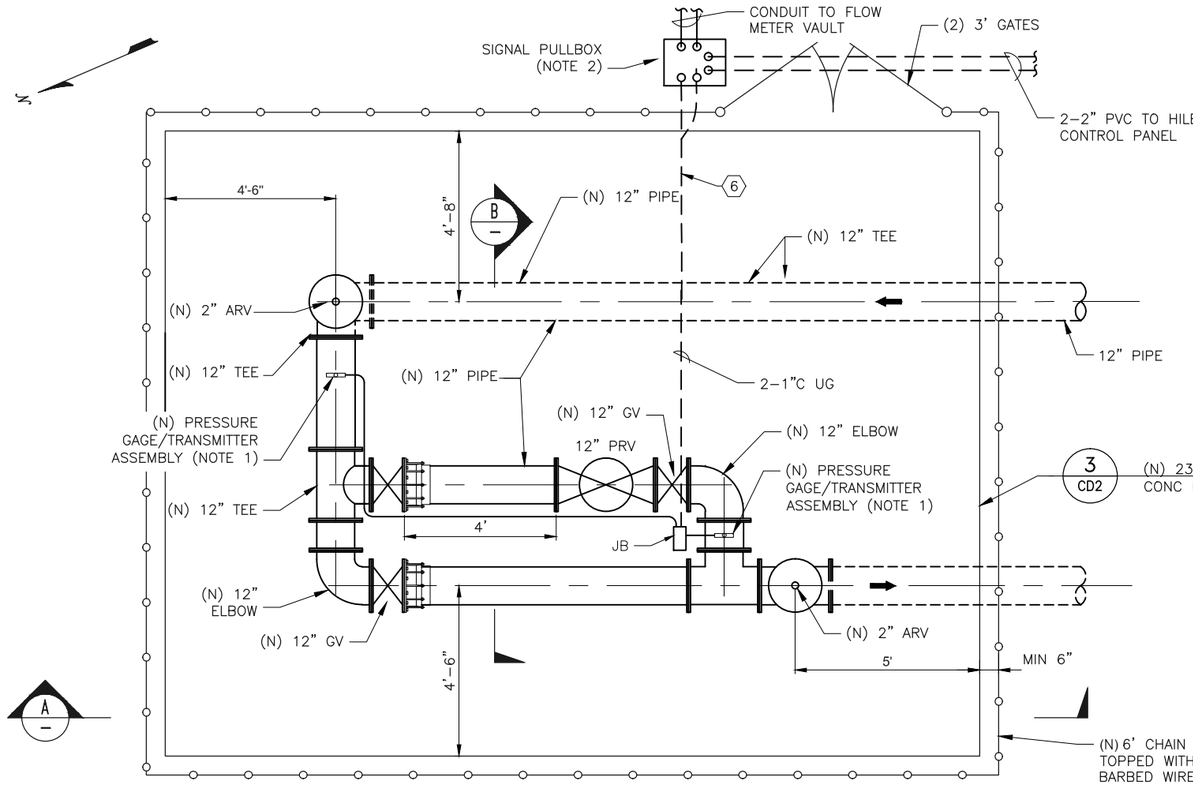

OUTLET PIPE PRS PLAN (1/-)
SCALE: NTS

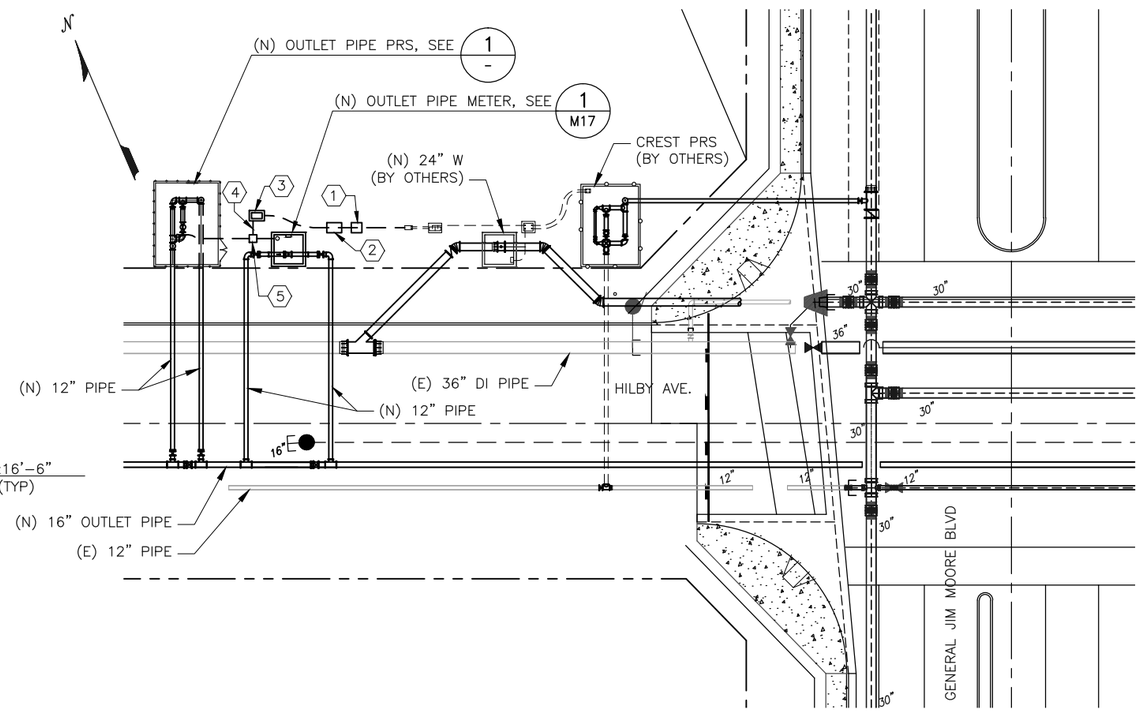

OUTLET PIPE PRS SITE
SCALE: NTS

NOTE:

1. WIRE UPSTREAM AND DOWNSTREAM PRESSURE TRANSMITTERS TO SEND THE DATA TO THE DESAL PLANT SCADA. INSTALL CONDUIT AND WIRING TO NORTH FLOW METER VAULT ACROSS THE STREET OR INSTALL NEW TELEMETRY AND ANTENNA AT THIS SITE. SUBMIT WIRING AND SCADA PLAN TO OWNER FOR REVIEW.
2. APPROXIMATE DESIGN POINT FOR 12" PRV. CONTRACTOR TO VERIFY FINAL CALIBRATIONS WITH OWNER. DOWNSTREAM PRESSURE: 50 PSI.

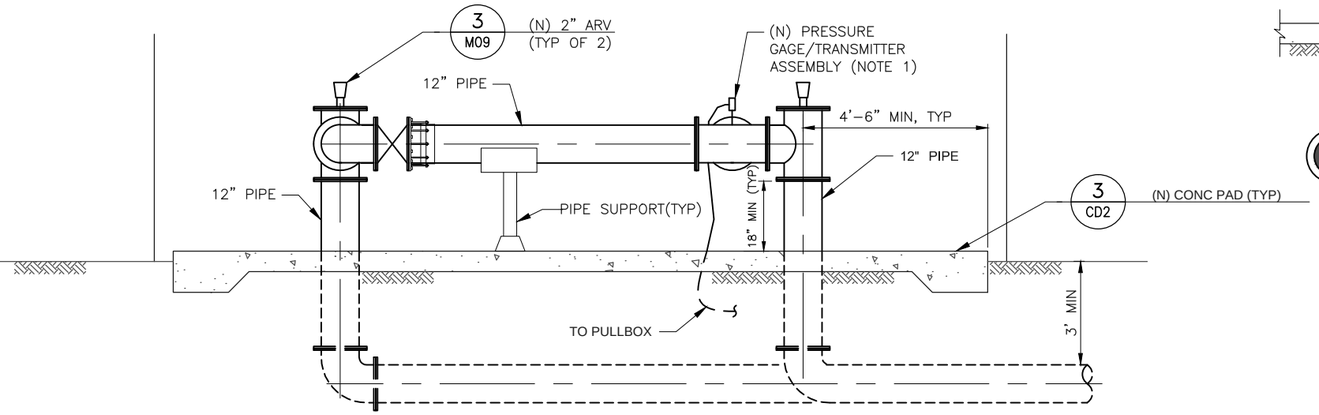

OUTLET PIPE PRS SECTION (A/-)
SCALE: NTS

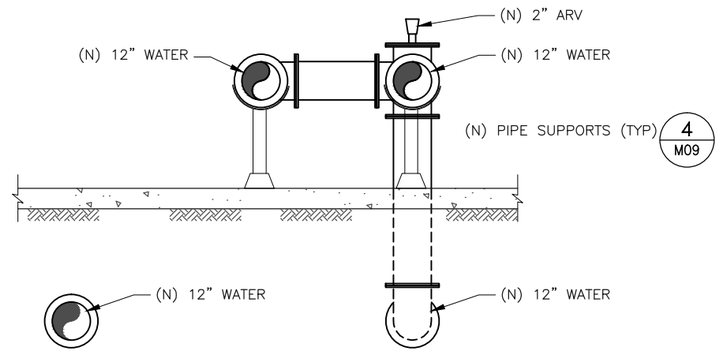

SECTION (B/-)
SCALE: NTS

NUMBERED NOTES:

1. EXISTING POWER PULLBOX, 13x24". EXTEND CONDUIT INTO NEW POWER PANEL.
2. NEW MINI POWER CENTER, MOUNTED ON CONCRETE BASE. SEE E01.
3. HILBY TELEMETRY PANEL ON CONCRETE BASE. SEE E03
4. SIGNAL CONDUIT, 2-2" PVC SCH 40, WITH 30" COVER UNDER HILBY.
5. SIGNAL PULLBOX FOR FLOW AND PRESSURE SIGNALS. SEE DETAIL 1.
6. PROVIDE 1"C TO PRESSURE TRANSMITTERS, WITH 1TSP#16 IN EACH CONDUIT.

REVISIONS

REGISTERED PROFESSIONAL ENGINEER — CRAIG JEFFERY SMITH — No. 70883 — Exp. 6-30-17 — CIVIL — STATE OF CALIFORNIA

TRANSMISSION MAINS FOR MPWSP
MECHANICAL
TERMINAL RESERVOIRS
OUTLET PIPE PRS DETAILS

CALIFORNIA
AMERICAN WATER

AECOM
1333 BROADWAY, SUITE 800
OAKLAND, CALIFORNIA 94612

AECOM
CALIFORNIA AMERICAN WATER

DRAWN BY C. SOMERA
PROJECT ENG'R T. PENG
APPROVED C. SMITH

DATE SEPTEMBER 2015 USE DIMENSIONS ONLY
PROJECT 60424498 SCALE AS SHOWN

USE APPROVED DRAWINGS ONLY FOR CONSTRUCTION PURPOSES

5005M16

10005005M16

F:\Work\CAL-Am-MPWSP\Terminal-Reservoir\1 Sheets\5005M16.dwg Christina Somera Sep 16, 2015 - 10:07am

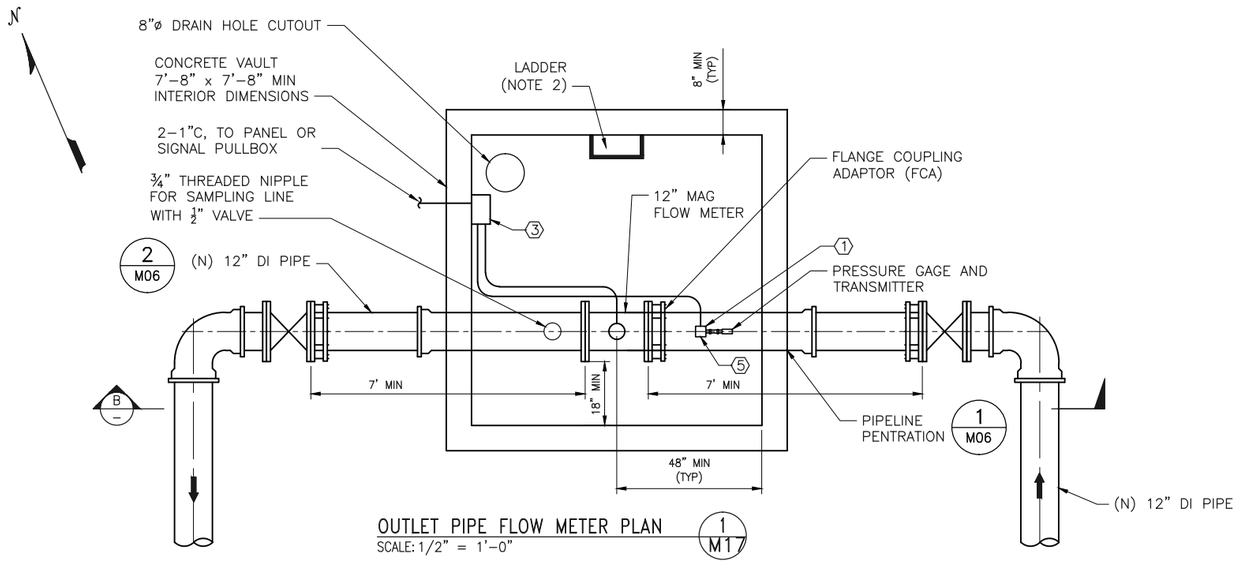

OUTLET PIPE FLOW METER PLAN (1/M17)
SCALE: 1/2" = 1'-0"

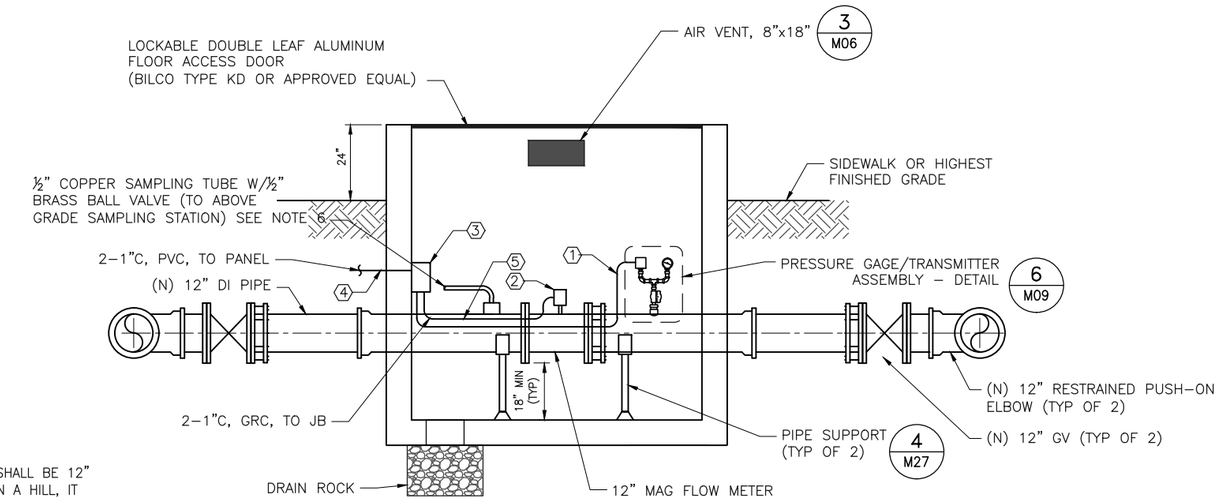

SECTION B (–)
1/2"=1'

NOTES:

1. THE BOTTOM OF THE AIR VENT SCREEN SHALL BE 12" ABOVE SIDEWALK, AND IF LOCATED ON A HILL, IT SHALL NOT FACE UP SLOPE.
2. THE LADDER SHALL HAVE A PERMANENTLY MOUNTED TELESCOPING SAFETY POST.

NUMBERED NOTES:

1. CONNECT TO 2-WIRE PRESSURE TRANSMITTER WITH FLEX CONDUIT.
2. MAGMETER SHALL BE DC POWERED. PROVIDE MFR SENSOR CABLE TO PANEL MOUNTED TRANSMITTER. PROVIDE GROUNDING PER MFR REQUIREMENTS.
3. PROVIDE NEMA 4X JUNCTION BOX, MOUNT TO CONCRETE WALL WITH STANDOFFS. SEAL ALL CONDUITS AFTER TESTING.
4. SEE ELECTRICAL SHEETS FOR ELECTRICAL CONTROL PANEL DETAILS.
5. PROVIDE LIQUID TIGHT FLEXIBLE METAL CONDUIT FOR ALL FIELD CONNECTIONS.
6. PROVIDE INSULATING COUPLING TO SEPARATE DISIMULAR PIPE METALS

0 2 4
1/2"=1'

REVISIONS

REGISTERED PROFESSIONAL ENGINEER
CRAIG JEFFERY SMITH
No. 70883
Exp. 6-30-17
CIVIL
STATE OF CALIFORNIA

TRANSMISSION MAINS FOR MPWSP
MECHANICAL
TERMINAL RESERVOIRS
FLOWMETER DETAILS

CALIFORNIA
AMERICAN WATER

AECOM
1333 BROADWAY, SUITE 800
OAKLAND, CALIFORNIA 94612

AECOM
CALIFORNIA AMERICAN WATER

DRAWN BY C. SOMERA
PROJECT ENG'R T. PENG
APPROVED C. SMITH
DATE SEPTEMBER 2015 USE DIMENSIONS ONLY
PROJECT 60424498 SCALE AS SHOWN

USE APPROVED DRAWINGS ONLY FOR CONSTRUCTION PURPOSES

5005M17

10005005M17

F:\Work\CAL-Am-MPWSP\Terminal-Reservoir\1 Sheets\5005M17.dwg Christina Somera Sep 16, 2015 - 10:07pm

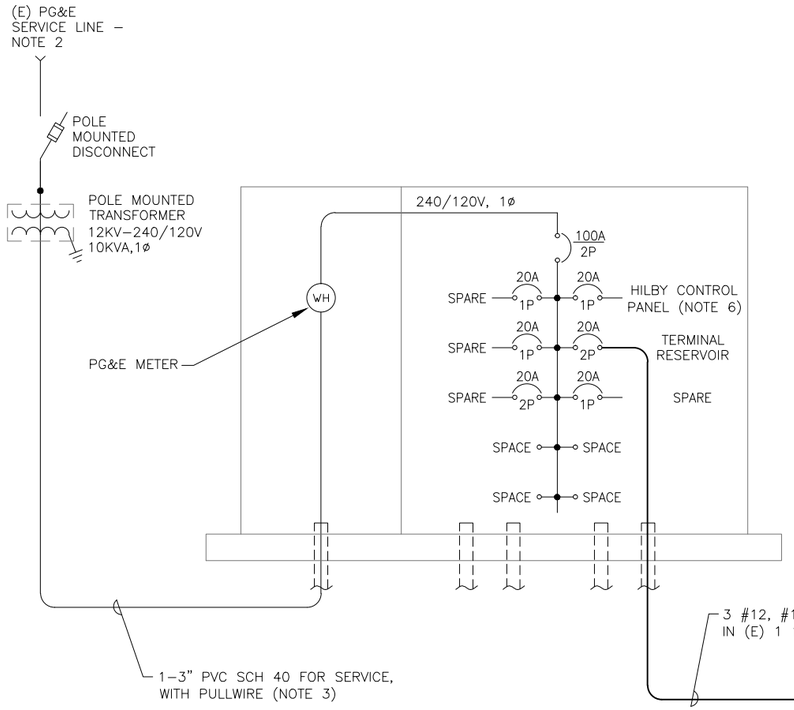

EXISTING SERVICE PANEL

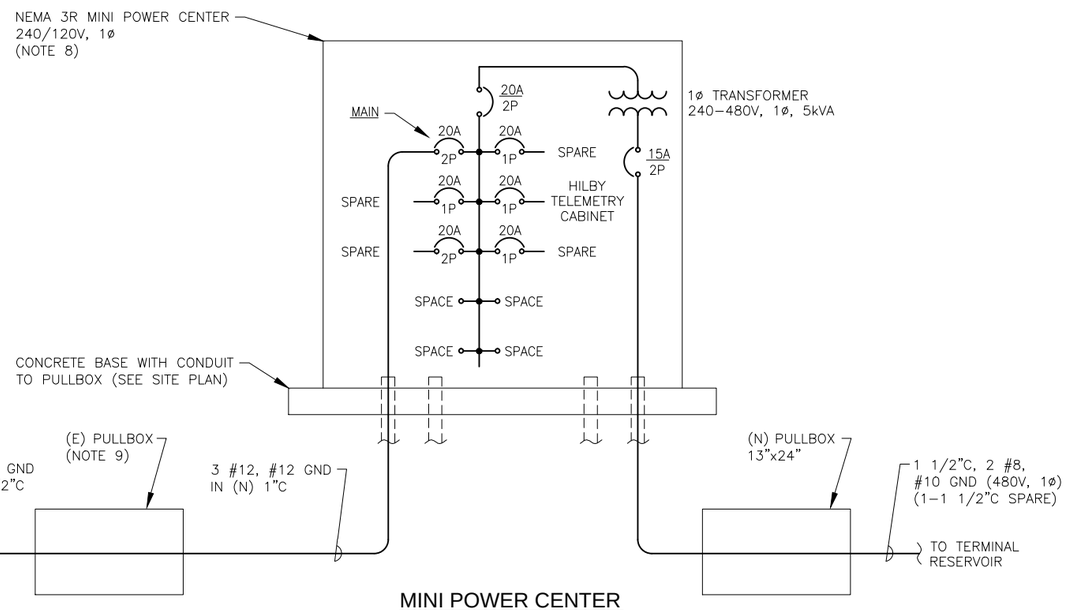

MINI POWER CENTER AT HILBY

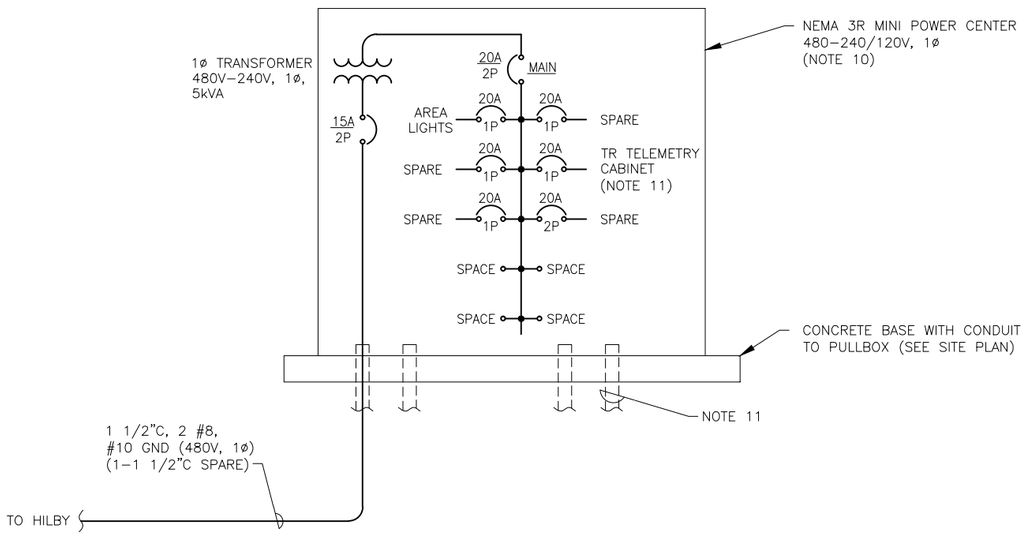

MINI POWER CENTER AT TERMINAL RESERVOIR

ELECTRICAL NOTES

1. SEE SITE PLAN FOR GENERAL ELECTRICAL NOTES.
2. ELECTRICAL SERVICE AND METERING PANEL DRAWINGS SHALL BE SUBMITTED TO OWNER AND PG&E FOR REVIEW AND APPROVAL BEFORE PLACING EQUIPMENT ORDER.
3. CONTRACTOR TO CONFIRM SERVICE CONDUIT SIZE AND ROUTING WITH PG&E. PROVIDE SERVICE CONDUIT AND TRENCH IN ACCORDANCE WITH PG&E REQUIREMENTS.
4. CONTRACTOR SHALL PROVIDE SERVICE PEDESTAL WITH TOTALLY BLANK OUTER PANEL, INTERNAL WATTHOUR METER PROVISIONS, AND DISTRIBUTION PANEL PER PG&E REQUIREMENTS FOR OUTDOOR PANELS. PANEL RATINGS SHALL MEET PG&E FAULT RATING REQUIREMENTS.
5. CONTRACTOR SHALL PROVIDE CONCRETE PANEL BASE, WITH DESIGN FOR SEISMIC AND OVERTURNING CALCULATIONS. PROVIDE 4–1 ½" PVC SCHEDULE 40 CONDUITS 13–INCH BY 24–INCH PULLBOX WITH PULLWIRE AND CONDUCTORS AS REQUIRED.
6. HILBY TELEMETRY CABINET CABLE REQUIREMENT: PROVIDE 2#12, #12 GND CU CONDUCTORS. USE 1" CONDUIT FROM PULLBOX TO CABINET.
7. CONDUITS SHALL BE PVC SCHEDULE 40 BELOW GRADE AND RIGID GALVANIZED STEEL ABOVE GRADE, WITH LIQUIDTIGHT FLEXIBLE METAL CONDUIT TO FIELD DEVICES (E.G., FLOW METER, PRESSURE TRANSMITTER).
8. PROVIDE MINI POWER CENTER, RATED 5KVA, 480–240/120V, FOR BOOSTING POWER TO TERMINAL RESERVOIR. PROVIDE CONCRETE BASE, GROUND ROD, AND CONDUITS OUT TO NEW 13–INCH BY 24–INCH PULLBOX.
9. INCOMING 240V TO POWER CENTER SHALL BE TAKEN FROM (E) POWER PANEL, THROUGH (E) PULLBOX TO POWER CENTER.
10. AT RESERVOIR SITE, PROVIDE SIMILAR MINI POWER CENTER RATED 5KVA, 480–240/120V, FOR BUCKING POWER TO TERMINAL RESERVOIR LOADS. PROVIDE CONCRETE BASE, GROUND ROD, AND CONDUITS OUT TO NEW 13–INCH BY 24–INCH PULLBOX. SEE SITE PLAN, SHEET 5005E04.
11. MINI POWER CENTER SHALL PROVIDE POWER TO RESERVOIR AREA 120V LOADS. SEE SHEET 5005E03 FOR TELEMETRY PANEL. SEE SHEET 5005E04 SITE PLAN FOR LIGHTING LAYOUT AND NOTES.

REGISTERED PROFESSIONAL ENGINEER
GURBAD SINGH KHALSA
No. 11185
Exp. 06/30/17
ELECTRICAL
STATE OF CALIFORNIA
9/15/15

REVISIONS

TRANSMISSION MAINS FOR MPWSP
ELECTRICAL
TERMINAL RESERVOIR
SINGLE LINE DIAGRAM

CALIFORNIA
AMERICAN WATER

URS CORPORATION
1333 BROADWAY, SUITE 800
OAKLAND, CALIFORNIA 94612

AECOM

CALIFORNIA AMERICAN WATER

DRAWN BY R. MORRISON
PROJECT ENG'R S. KHALSA
APPROVED C. SMITH

DATE SEPTEMBER 2015 USE DIMENSIONS ONLY
PROJECT 60424498 SCALE AS SHOWN

USE APPROVED DRAWINGS ONLY FOR CONSTRUCTION PURPOSES

5005E01

10005005E01

F:\Work\CAL-Am-MPWSP\Terminal-Reservoir\1 Sheets\Electrical\5005E01.dwg Christina Somera Sep 16, 2015 - 10:09pm

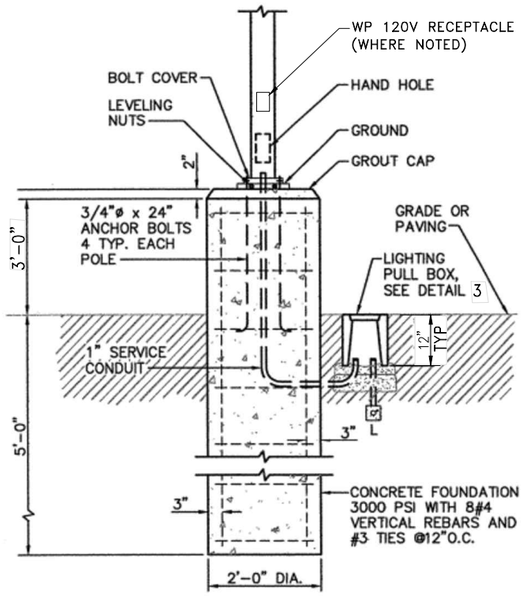

1 - LIGHT POLE BASE DETAIL
SCALE: NONE

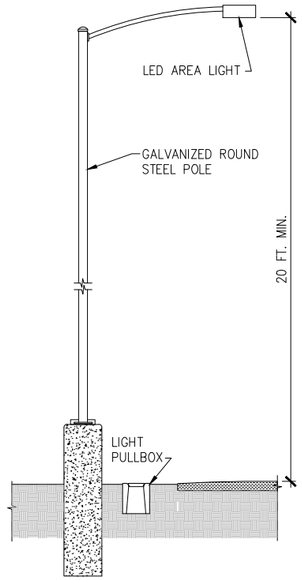

2 - LIGHT POLE DETAIL
SCALE: NONE

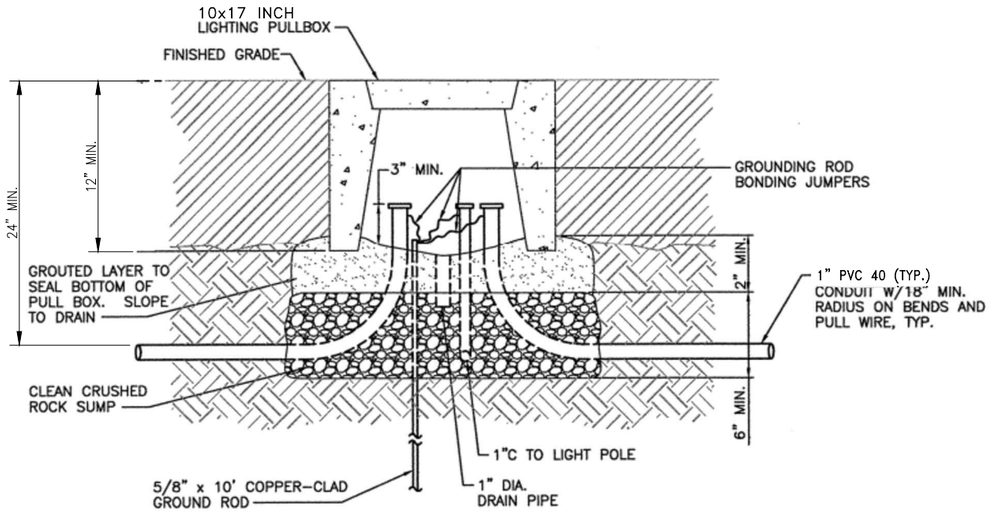

3 - TYPICAL LIGHT PULL BOX SECTION
SCALE: NONE

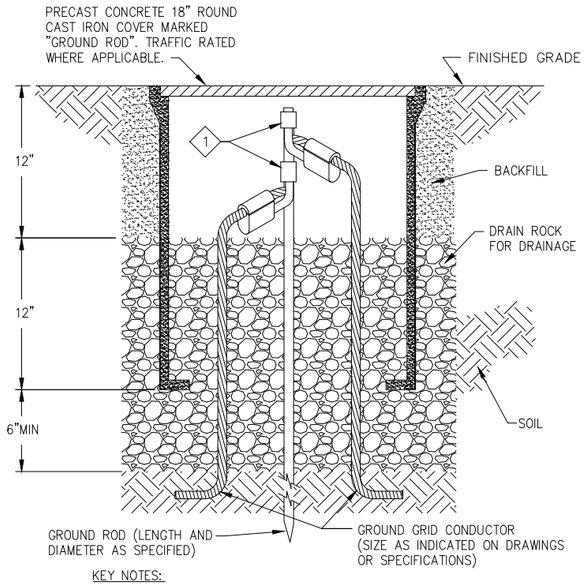

KEY NOTES:

1 GROUND ROD TO GROUND GRID CROSS CONNECTOR.
SIZE FOR ROD AND CABLE PER MANUFACTURERS GUIDELINES.

4 - GROUND ROD AND GROUND WELL DETAIL
SCALE: NONE

REVISIONS

REGISTERED PROFESSIONAL ENGINEER
SURBAD SINGH KHALSA
No. 11185
Exp. 06/30/17
ELECTRICAL
STATE OF CALIFORNIA
9/15/15

TRANSMISSION MAINS FOR MPWSP
ELECTRICAL
TERMINAL RESERVOIR
LIGHTING DETAILS

CALIFORNIA
AMERICAN WATER

URS CORPORATION
1333 BROADWAY, SUITE 800
OAKLAND, CALIFORNIA 94612

AECOM

CALIFORNIA AMERICAN WATER

DRAWN BY R. MORRISON
PROJECT ENG'R S. KHALSA
APPROVED C. SMITH

DATE SEPTEMBER 2015 USE DIMENSIONS ONLY
PROJECT 60424498 SCALE AS SHOWN

USE APPROVED DRAWINGS ONLY
FOR CONSTRUCTION PURPOSES

5005E02

10005005E02

F:\Work\CAL-Am-MPWSP\Terminal-Reservoir\1 Sheets\Electrical\5005E02.dwg Christina Somera Sep 16, 2015 - 10:09pm

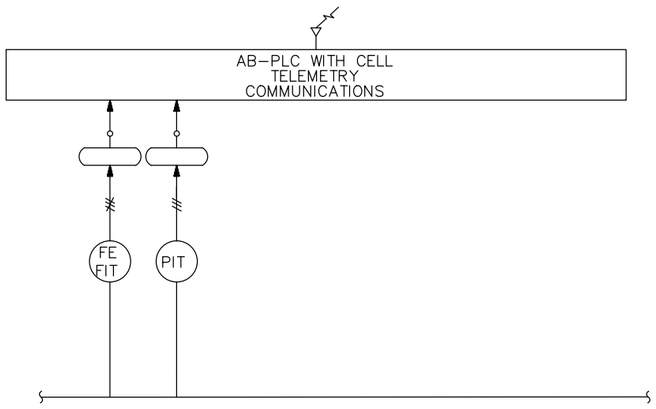

FLOW METERING VAULT P&ID
SCALE: NTS

NOTES:

1. CONTRACTOR SHALL PROVIDE TELEMETRY CABINETS FOR HILBY AND TERMINAL RESERVOIR SITES, WITH SIMILAR FIELD DEVICES AND TELEMETRY. SEE SHEET 0000C03 AND 0000E04 FOR RESERVOIR FLOW METER VAULTS. SEE SHEETS 0000M16 AND 0000M17 FOR HILBY AREA INSTRUMENTATION REQUIREMENTS.
2. THE TELEMETRY ENCLOSURE SHALL BE LOCKABLE, WEATHERPROOF, CORROSION RESISTANT, VENTED, MEASURE APPROXIMATELY 60"H x 30"W x 24"D, AND CONTAIN THE FLOW METER REMOTE TRANSMITTER AND DISPLAY, PANEL MOUNTED LED LIGHT FIXTURE WITH DOOR ACTIVATED SWITCH, AND TRANSFORMER, CONVERTER, AND ALL OTHER EQUIPMENT REQUIRED TO MONITOR FIELD PROCESS AND TRANSMIT SIGNAL OUT.
3. CONTRACTOR SHALL PROVIDE ALLEN–BRADLEY PLC FOR FIELD I/O AND COMMUNICATION OUTPUT. CELLULAR TRANSCEIVER SHALL BE SIERRA WIRELESS AIRLINK GX400, BASE MODEL. PROVIDE MOUNTING HARDWARE, POWER SUPPLIES, AND CELLULAR ANTENNA ON ENCLOSURE. SEE SPECIFICATIONS.
4. SEE SINGLE LINE DIAGRAM, SHEET 0000E01, FOR POWER CENTER REQUIREMENTS AT EACH SITE. 480V SINGLE PHASE SHALL BE DELIVERED TO RESERVOIR SITE FROM HILBY PANEL SOURCE. PROVIDE UPS IN EACH TELEMETRY CABINET, RATED FOR 4 HOURS BACKUP PANEL POWER. PROVIDE DC POWER SUPPLIES FOR DC LOADS, E.G., FLOW METER AND CONTROL DEVICES.
5. TELEMETRY PANEL SHALL BE PROVIDED WITH BLANK FRONT OUTER PANEL, BLANK INNER PANEL WITH PADLOCKABLE MAIN DISCONNECT, AND INNER BACK PANEL. PROVIDE ALL NFPA WARNING SIGNS AND LABELS. PROVIDE SCREENED VENTS AND HIGH TEMP SWITCH CONTROLLED VENTILATION FAN.
6. CONTRACTOR SHALL PROVIDE INTERNAL WIRING AND DEVICES AS REQUIRED. TYPICAL WIRING SHOWN IS FOR DEVICE CALLOUTS AND NOT FOR FINAL WIRING SCHEME.

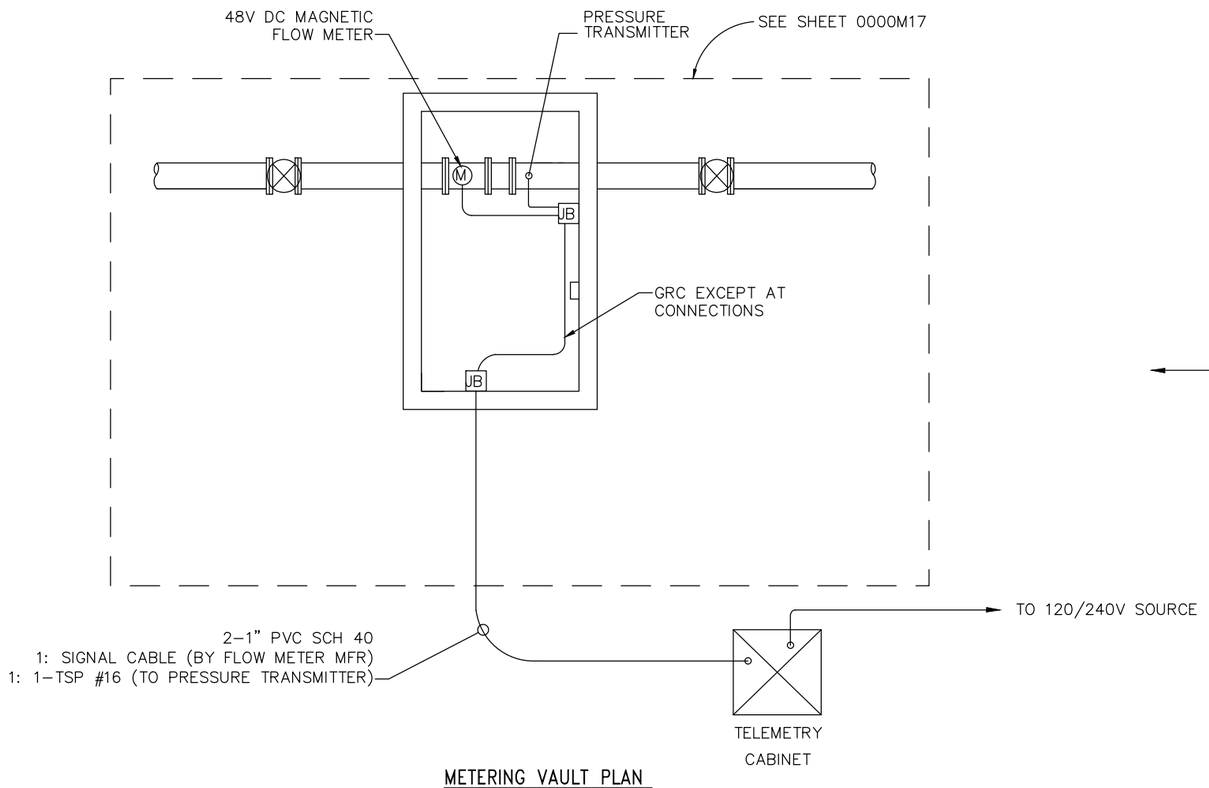

METERING VAULT PLAN
SCALE: NTS

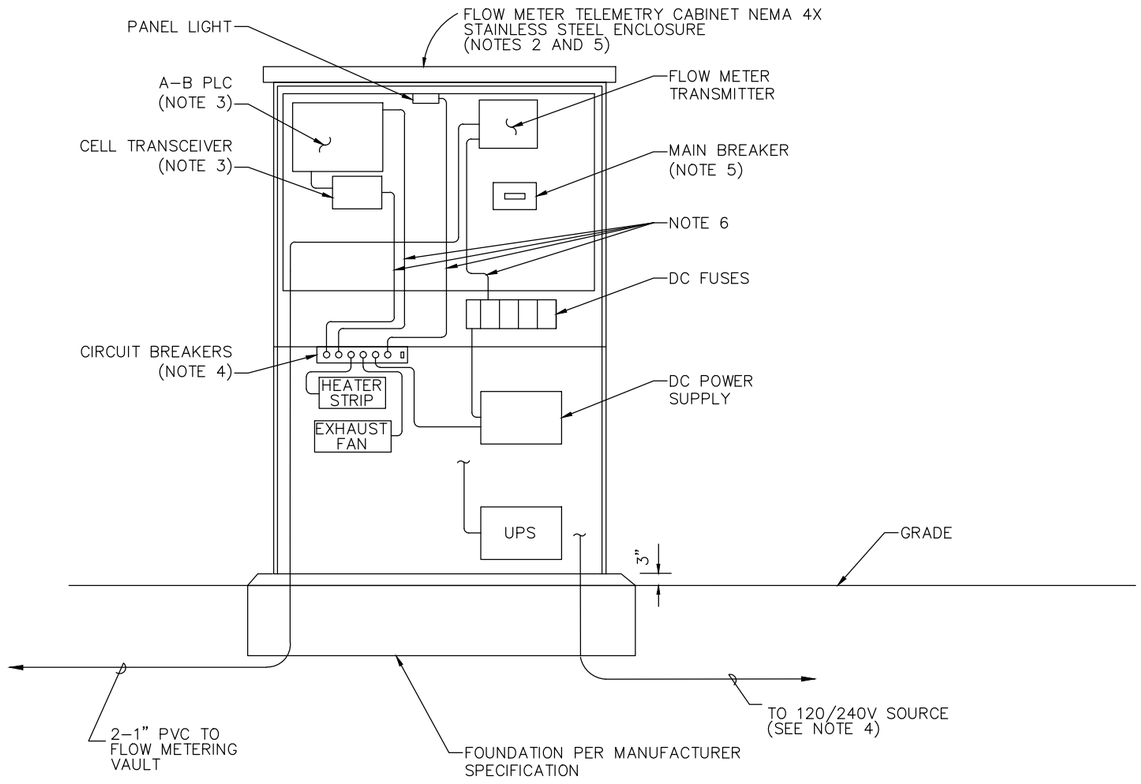

TELEMETRY CABINET ELEVATION (TYP OF 2)
SCALE: NTS

REVISIONS

REGISTERED PROFESSIONAL ENGINEER
SUKHJIT SINGH KHALSA
No. 11185
Exp. 06/30/17
ELECTRICAL
STATE OF CALIFORNIA
9/15/15

TRANSMISSION MAINS FOR MPWSP
ELECTRICAL
TERMINAL RESERVOIR
FLOW METER ELECTRICAL DETAILS

CALIFORNIA
AMERICAN WATER

AECOM
1333 BROADWAY, SUITE 800
OAKLAND, CALIFORNIA 94612

DRAWN BY R. MORRISON
PROJECT ENG'R S.KHALSA
APPROVED C. SMITH

DATE SEPTEMBER 2015 USE DIMENSIONS ONLY
PROJECT 60424498 SCALE AS SHOWN

USE APPROVED DRAWINGS ONLY
FOR CONSTRUCTION PURPOSES

5005E03

10005005E03

E:\Work\CAL-Am-MPWSP\Terminal-Reservoir\1 Sheets\Electrical\5005E03.dwg Christina Somera Sep 16, 2015 - 10:09pm

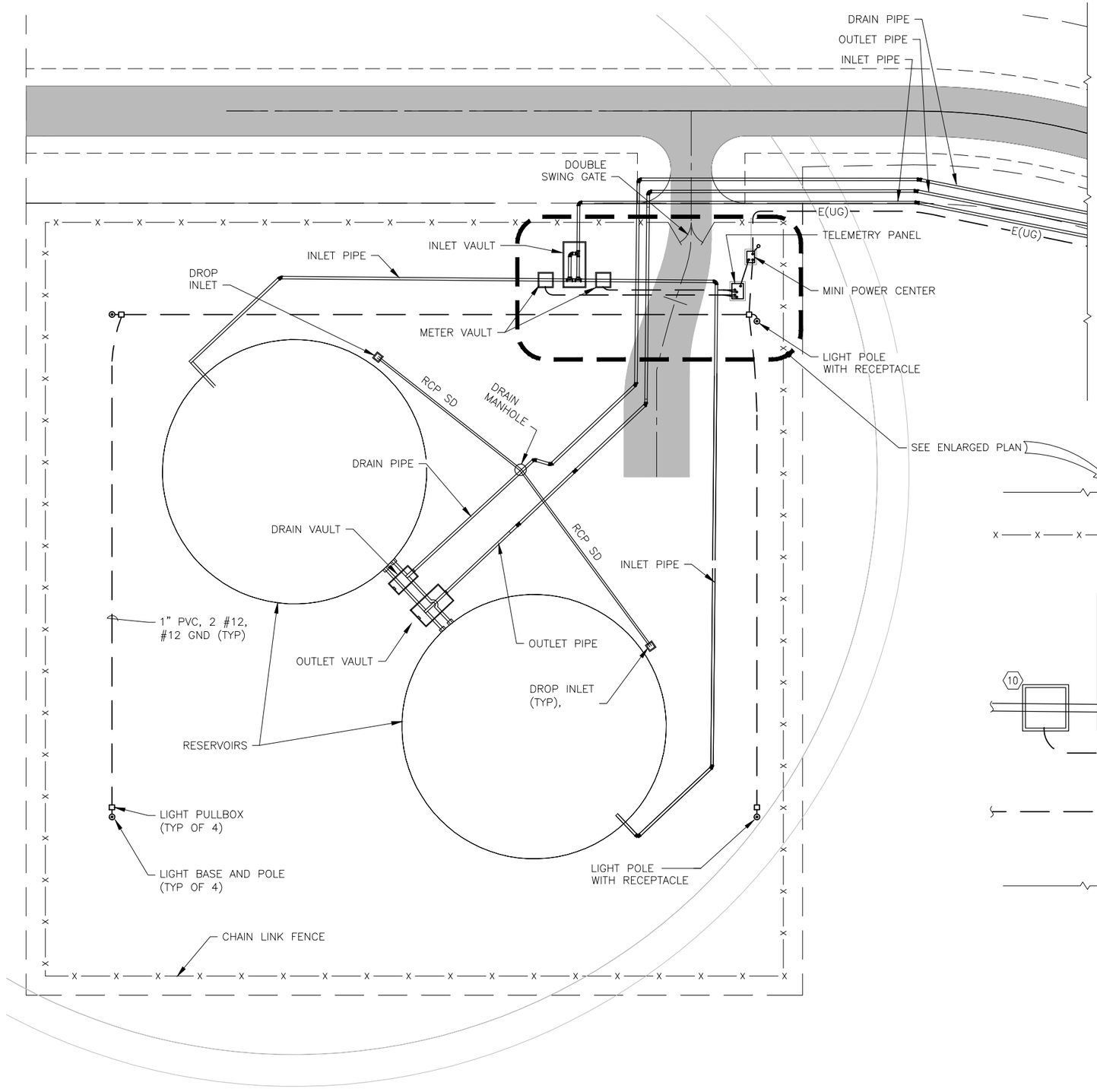

0 30 60 90
SCALE 1" = 30'

TANK ELECTRICAL SITE PLAN
1"=30'

SHEET NOTES

1. UG CONDUITS TO HILBY, 480V, 2– 1 ½" PVC SCH 40: 1– 1 ½"C, 2#8, #10 GND; 1– 1 ½"C SPARE
2. MINI POWER CENTER ON CONCRETE PAD. SEE SINGLE LINE DIAGRAM.
3. UG CONDUITS, 2– 1" PVC SCH 40: 1– 1"C, 2#12, #12 GND (120V); 1– 1"C SPARE
4. TELEMETRY CONTROL PANEL. SEE SHEET 5005E03.
5. UG CONDUITS, 2– 1" PVC SCH 40: 1– 1"C WITH FLOW METER CABLE; 1– 1"C W/1 TSP #16, PRESSURE TRANSMITTER
6. UG CONDUITS, 2– 1" PVC SCH 40: 1– 1"C WITH 2#12, #12 GND (120V, LTG/RECEPT; 1–1"C SPARE
7. LIGHTING PULLBOX, 10" x 17" (CHRISTY N09, TYP)
8. LIGHT POLE AND FOUNDATION. SEE DETAILS, SHEET 5005E02
9. GROUND ROD AND WELL. SEE DETAIL 4, SHEET 5005E02.
10. FLOW METER VAULT. SEE DETAILS ON SHEET M17.

ELECTRICAL NOTES

1. ELECTRICAL WORK SHALL MEET CALIFORNIA ELECTRICAL CODE AND PACIFIC GAS AND ELECTRIC (PG&E) REQUIREMENTS. CONFIRM CONSTRUCTION AND INSPECTIONS WITH AHJ.
2. EXISTING ELECTRICAL SERVICE SHALL BE BROUGHT TO TERMINAL RESERVOIRS FROM HILBY SITE. SEE MECHANICAL SHEETS FOR ELECTRICAL PANEL LOCATION. SEE SINGLE LINE DIAGRAM, SHEET 0000E01, FOR ELECTRICAL REQUIREMENTS. CONTRACTOR SHALL SECURE ALL ELECTRICAL PERMITS AND CONFIRM REQUIREMENTS WITH OWNER.
3. CONTRACTOR SHALL PROVIDE MINI POWER CENTER, CONCRETE PAD, WITH GROUND ROD WELL AND UFER GROUND.
4. SEE SHEET 0000E03 FOR TELEMETRY PANEL ELECTRICAL REQUIREMENTS. CONTRACTOR SHALL PROVIDE CONCRETE PAD, METERING AND CONTROL DEVICES FOR FLOW AND PRESSURE MONITORING AND TELEMETRY.
5. SPARE CONDUITS SHALL BE PROVIDED WITH PULL CORD AND CAPPED.

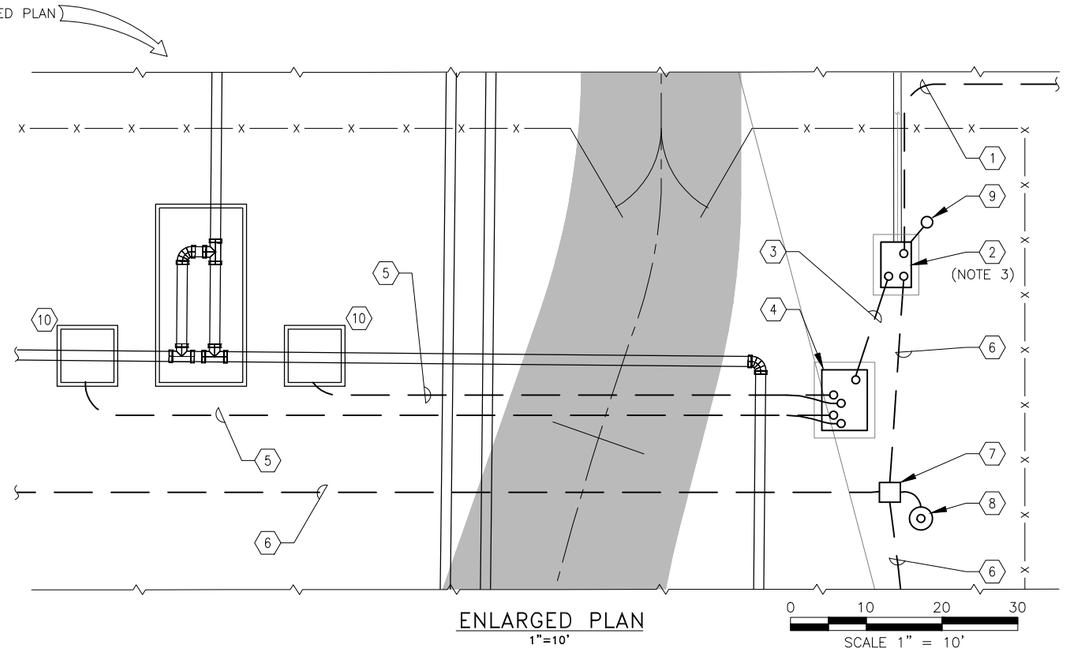

ENLARGED PLAN
1"=10'

0 10 20 30
SCALE 1" = 10'

REVISIONS

REGISTERED PROFESSIONAL ENGINEER
SUKHRAJ SINGH KHALSA
No. 11185
Exp. 06/30/17
ELECTRICAL
STATE OF CALIFORNIA
9/15/15

TRANSMISSION MAINS FOR MPWSP
ELECTRICAL
TERMINAL RESERVOIR
TANK ELECTRIC PLAN

CALIFORNIA
AMERICAN WATER

URS CORPORATION
1333 BROADWAY, SUITE 800
OAKLAND, CALIFORNIA 94612

AECOM

CALIFORNIA AMERICAN WATER

DRAWN BY R. MORRISON
PROJECT ENG'R S. KHALSA
APPROVED C. SMITH

DATE SEPTEMBER 2015 USE DIMENSIONS ONLY
PROJECT 60424498 SCALE AS SHOWN

USE APPROVED DRAWINGS ONLY FOR CONSTRUCTION PURPOSES

5005E04

10005005E04

F:\Work\CAL-Am-MPWSP\Terminal-Reservoir\1 Sheets\Electrical\5005E04.dwg Christina Somera Sep 16, 2015 - 10:10am